ZENITH®

SERVICE MANUAL

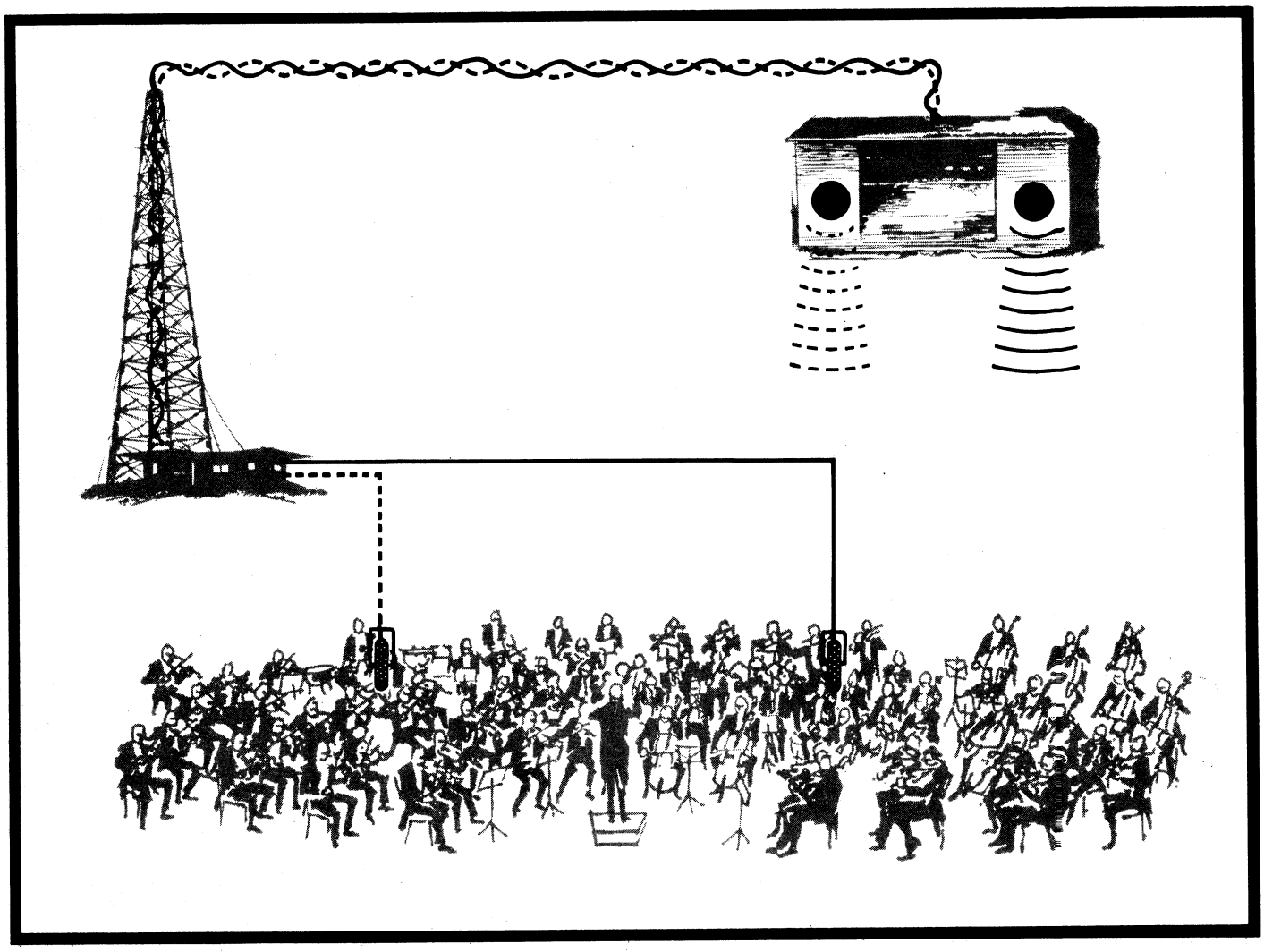

HIGH FIDELITY AND STEREO FM MODELS

ZENITH RADIO CORPORATION

1900 N. AUSTIN AVENUE CHICAGO, ILLINOIS 60639

HF13 PRICE 75 CENTS PART #923-305

INDEX

MODEL	SCHEMATIC PAGE	TUBE LAYOUT PAGE	CHASSIS PARTS LIST PAGE
MLT15	53	54	85-86-87
MP10	33	33	83
MPS40	34	34	83
MPS45	35	35	See HF 12
SA49	36	36	84
MPS50	37	37	See HF 12
LPS70-1	38	38	84-85
LPS75-1	39	39	See HF 12
MPS85	40	40	See HF 12 (LPS-80)
LPM95-1	See HF 12	See HF 12	See HF 12
LPM95-2	41	42	See HF 12
MJ1035-1	69	70	100-101-102
RT1960	43-47	44-48	See HF 12
SM2420	45	44	See HF 12
RM2420	43-47	44-48	See HF 12
MM2420	43-49	44-50	See HF 12
SM2501	45	44	See HF 12
RM2601	43-47	44-48	See HF 12
MM2601	43-49	44-50	See HF 12
MM2603	43-49	44-50	See HF 12
MM2604	43-49	44-50	See HF 12
MM2606	53-61-62	54-63	85-86-87-92-93
MM2607	53-61-62	54-63	85-86-87-92-93

INDEX

MODEL	SCHEMATIC PAGE	TUBE LAYOUT PAGE	CHASSIS PARTS LIST PAGE
MM2608	53-64-65	54-66	85-86-87-93
MM2610	53-64-65	54-66	85-86-87-93
MM2640	53-64-65	54-66	85-86-87-93
MM2650	53-64-65	54-66	85-86-87-93
MM2670	67-55	68-56	87-88-94-95-96-97
MM2675	67-55	68-56	87-88-94-96-97
MM2685	67-55	68-56	87-88-94-96-97
RM2784	51-71-72	52	See HF 12
MM2784	57-71-72	58	88-89-90
MM2785	59	60	90-91-92
7100	46-53	44-54	85-86-87 (See HF 12)
7300	53-61-62	54-63	85-86-87-92-93
7500-6	67-55	68-56	87-88-94-95-96-97
MR102	76		See HF 12
MR105	76		See HF 12
TUNER S61017	73		97
S61363	73		97-98
S64706	73		98
S65077	75		100
S66346	74		98-99
S66347	74		99
S66348	74		99

FEATURES OF HIGH FIDELITY & STEREO FM MODELS

MODEL NO.	CABINET				CHASSIS			SPEAKER		
	STYLE	MATERIAL	FINISH	COLOR	MODEL	TYPE	EIA POWER OUTPUT	SIZE (IN.)	MAGNET (WT.OZ.)	V.C. IMPEDANCE
MLT 15		DROP - IN - TUNER			8L1T20Z	AM-FM Tuner	----	----	----	----
ZP2B	Table (w/handle) (lift lid)	Plastic	Textured Plastic	Blue & White	1L20	1 Tube Phono Only	----	4	.68	3.2
ZP2V	Table (w/handle) (lift lid)	Plastic	Textured Plastic	Red & White	1L20	1 Tube Phono Only	----	4	.68	3.2
MP10	Table (w/handle)	Wood	Plastic Coated Paper		Waters Conley	1 Tube Phono Only	----	4		3.2
MPS40	Table (w/handle) (hinged speaker) (enclosure)	Wood	Plastic Coated Paper		Waters Conley	2 Tube Phono Only	----	2-5 1/4		3.2
MPS45L	Table (w/handle) (hinged speaker) (enclosure)	Wood	Plastic Coated Paper	Sea Shell & Off White	2L20	2 Tube Phono Only	----	2-6 x 6	1.47	3.2
MPS45J	Table (w/handle) (hinged speaker) (enclosure)	Wood	Plastic Coated Paper	Brown & White	2L20	2 Tube Phono Only	----	2-4 x 6	1.47	3.2
SA49C	Table (w/handle) (hinged speaker) (enclosure)	Wood	Plastic Coated Paper	Black & Hickory Light Gray	Waters Conley	1 Tube Phono Only	----	2-5 1/4	1.47	3.2
MPS50L	Table (w/handle) (hinged speaker) (enclosure)	Wood	Plastic Coated Paper	Tan & White	3L03	3 Tube Phono Only	----	2-5 x 7	1.0	3.2
MPS50Y	Table (w/handle) (hinged speaker) (enclosure)	Wood	Plastic Coated Paper	Black	3L03	3 Tube Phono Only	----	2-5 x 7	1.0	3.2
LPS70C1	Table (w/handle) (hinged speaker) (enclosure)	Wood	Plastic Coated Cloth	Charcoal Gray & Planked Walnut	Waters Conley	3 Tube Phono Only	----	2-6 1/2 2-4	2.15 .68	3.2 3.2
LPS70L1	Table (w/handle) (hinged speaker) (enclosure)	Wood	Plastic Coated Cloth	Light Whirlwind Tan Metallic & Planked Walnut	Waters Conley	3 Tube Phono Only	----	2-6 1/2 2-4	2.15 .68	3.2 3.2
LPS75W1	Table (w/handle) (hinged speaker) (enclosure)	Wood	Plastic Coated Paper	Beige & Walnut	3L05	3 Tube Phono Only	----	2-6 1/2 2-4	3.16 .46	3.2 45.0
LPS75C1	Table (w/handle) (hinged speaker) (enclosure)	Wood	Plastic Coated Paper	Charcoal Gray Metallic Finish	3L05	3 Tube Phono Only	----	2-6 1/2 2-4	3.16 .46	3.2 45.0
MPS85W	Table (w/handle) (hinged speaker) (enclosure)	Wood	Plastic Coated Cloth	Walnut & Beige	4L24	4 Tube Phono Only	----	2-3 1/2 2-5 1/4 1-3 x 14	.46 1.33 3.16	45.0 3.2 3.2

FEATURES OF HIGH FIDELITY & STEREO FM MODELS

SPEAKER NO.	RECORD CHANGER (SEE NOTES)				CONTROL PANEL	INDI-CATOR LIGHT	TYPE OF IDENTIFICATION AND SPECIAL FEATURES	RECORD STORAGE	RADIAL SOUND SPEAKER
	TYPE	MOUNTING	CART-RIDGE	STYLUS					
----	----	----	----	----	Die-Cast Escutcheon	No	ZENITH Crest	----	----
49-933	Manual Player	Shelf	142-95	Sapphire Sapphire	None	No	ZENITH Crest	----	None
49-933	Manual Player	Shelf	142-95	Sapphire Sapphire	None	No	ZENITH Crest	----	None
49-999	(C)169-236 (L)169-238	Hinged Panel	142-146	Sapphire Sapphire	Hot Stamped on Cabinet	No	ZENITH Crest	None	None
49-999	(C)169-237 (L)169-239	Hinged Panel	142-113	Sapphire Sapphire	Metal Plate	No	ZENITH Stereophonic Crest	None	None
49-1001	169-192	Hinged Panel	142-124	Sapphire Sapphire	Metal Plate	No	ZENITH Stereophonic Crest	None	None
49-1001	169-192	Hinged Panel	142-124	Sapphire Sapphire	Metal Plate	No	ZENITH Stereophonic Crest	None	None
964-15881	169-229	Hinged Panel	142-113	Sapphire Sapphire	Metal Plate	No	ZENITH Stereophonic Crest	None	None
49-995	169-234	Hinged Panel	142-142	Sapphire Sapphire	Metal Plate	No	ZENITH Stereophonic Crest	None	None
49-995	169-235	Hinged Panel	142-142	Sapphire Sapphire	Metal Plate	No	ZENITH Stereophonic Crest	None	None
964-12963 964-11792	169-234	Hinged Panel	142-142	Sapphire Sapphire	Metal Plate	No	ZENITH Stereophonic Crest	None	None
964-12963 964-11792	169-234	Hinged Panel	142-142	Sapphire Sapphire	Metal Plate	No	ZENITH Stereophonic Crest	None	None
49-1020 49-1012	169-230	Hinged Panel	142-142	Sapphire Sapphire	Metal Plate	No	ZENITH Stereophonic Crest	None	None
49-1020 49-1012	169-230	Hinged Panel	142-142	Sapphire Sapphire	Metal Plate	No	ZENITH Stereophonic Crest	None	None
49-978 49-1008 49-834	169-231	Shelf	142-143	Diamond Sapphire	Die-Cast Escutcheon	No	ZENITH Stereophonic Crest Fidelity 5 Speakers	None	None

FEATURES OF HIGH FIDELITY & STEREO FM MODELS

	CABINET				CHASSIS			SPEAKER		
MODEL NO.	STYLE	MATERIAL	FINISH	COLOR	MODEL	TYPE	EIA POWER OUTPUT	SIZE (IN.)	MAGNET (WT.OZ.)	V.C. IMPEDANCE
MPS85C	Table (w/handle) (hinged speaker) (enclosure)	Wood	Plastic Coated Cloth	Med. Gray & Dark Gray	4L24	4 Tube Phono Only	5W	2-3 1/2 2-5 1/4 1-3 x 14	.46 1.33 3.16	45.0 3.2 3.2
LPM95W2	Table (w/handle) (hinged speaker) (enclosure)	Wood	Plastic Coated Cloth	Walnut & Beige	10L02	Phono-AM-FM	5W	2-3 1/2 2-8	.46 4.8	45.0 6.4
LPM95L2	Table (w/handle) (hinged speaker) (enclosure)	Wood	Plastic Coated Cloth	Mahogany & Beige	10L02	Phono-AM-FM	5W	2-3 1/2 2-8	.46 4.8	45.0 6.4
RT1960W	Console (lift lid)	Wood	Wood	Walnut	3L02 6L01Z	Phono-AM-FM	5W	4-3 1/2 2-6 x 9	.46 3.16	45.0 6.4
MT1960W	Console (lift lid)	Wood	Wood	Walnut	3L02 7L01Z	Phono-AM-FM	5W	4-3 1/2 2-6 x 9	.46 3.16	45.0 6.4
SM24-20W	Console (sliding panels)	Wood	Wood	Walnut	3L04	Phono Only	5W	2-3 1/2 2-6 x 9	.46 3.16	45.0 6.4
SM24-20R	Console (sliding panels)	Wood	Wood	Mahogany	3L04	Phono Only	5W	2-3 1/2 2-6 x 9	.46 3.16	45.0 6.4
SM24-20H	Console (sliding panels)	Wood	Wood	Cherry	3L04	Phono Only	5W	2-3 1/2 2-6 x 9	.46 3.16	45.0 6.4
SM24-20M	Console (sliding panels)	Wood	Wood	Maple	3L04	Phono Only	5W	2-3 1/2 2-6 x 9	.46 3.16	45.0 6.4
RM24-20W	Console (sliding panels)	Wood	Wood	Walnut	3L02 6L01	Phono-AM-FM	5W	2-3 1/2 2-6 x 9	.46 3.16	45.0 6.4
RM24-20R	Console (sliding panels)	Wood	Wood	Mahogany	3L02 6L01	Phono-AM-FM	5W	2-3 1/2 2-6 x 9	.46 3.16	45.0 6.4
RM24-20H	Console (sliding panels)	Wood	Wood	Cherry	3L02 6L01	Phono-AM-FM	5W	2-3 1/2 2-6 x 9	.46 3.16	45.0 6.4
RM24-20M	Console (sliding panels)	Wood	Wood	Maple	3L02 6L01	Phono-AM-FM	5W	2-3 1/2 2-6 x 9	.46	45.0 6.4
MM24-20W	Console (sliding panels)	Wood	Wood	Walnut	3L02 7L01	Phono-AM-FM	5W	2-3 1/2 2-6 x 9	.46 3.16	45.0 6.4
MM24-20R	Console (sliding panels)	Wood	Wood	Mahogany	3L02 7L01	Phono-AM-FM	5W	2-3 1/2 2-6 x 9	.46 3.16	45.0 6.4
MM24-20H	Console (sliding panels)	Wood	Wood	Cherry	3L02 7L01	Phono-AM-FM	5W	2-3 1/2 2-6 x 9	.46 3.16	45.0 6.4
MM24-20M	Console (sliding panels)	Wood	Wood	Maple	3L02 7L01	Phono-AM-FM	5W	2-3 1/2 2-6 x 9	.46 3.16	45.0 6.4
SM25C01W	Console (lift lid)	Wood	Wood	Walnut	3L04	Phono Only	5W	4-3 1/2 2-6 x 9	.46 3.16	45.0 6.4

FEATURES OF HIGH FIDELITY & STEREO FM MODELS

SPEAKER NO.	RECORD CHANGER (SEE NOTES) TYPE	MOUNTING	CART-RIDGE	STYLUS	CONTROL PANEL	INDI-CATOR LIGHT	TYPE OF IDENTIFICATION AND SPECIAL FEATURES	RECORD STORAGE	RADIAL SOUND SPEAKER
49-978 49-1008 49-834	169-232	Shelf	142-143	Diamond Sapphire	Die-Cast Escutcheon	No	ZENITH Stereophonic High Fidelity 5 Speakers	None	None
49-978 49-1009	169-233	Hinged Panel	142-143	Diamond Sapphire	Plastic Escutcheon	Yes	ZENITH Stereophonic High Fidelity - Crest Stereophonic - FM	None	None
49-978 49-1009	169-233	Hinged Panel	142-143	Diamond Sapphire	Plastic Escutcheon	Yes	ZENITH Stereophonic High Fidelity - Crest Stereophonic - FM	None	None
49-978 49-902	169-226	Shelf	142-143	Diamond Sapphire	Plastic Escutcheon	No	ZENITH Stereophonic High Fidelity - Crest FM Radio	Yes	♦
49-978 49-902	169-226	Shelf	142-143	Diamond Sapphire	Plastic Escutcheon	No	ZENITH Stereophonic High Fidelity - Crest Stereophonic - FM	Yes	♦
49-978 49-902	169-209	Shelf	142-137	Diamond Sapphire	Plastic Escutcheon	No	ZENITH Stereophonic High Fidelity - Crest	None	♦
49-978 49-902	169-209	Shelf	142-137	Diamond Sapphire	Plastic Escutcheon	No	ZENITH Stereophonic High Fidelity - Crest	None	♦
49-978 49-902	169-209	Shelf	142-137	Diamond Sapphire	Plastic Escutcheon	No	ZENITH Stereophonic High Fidelity - Crest	None	♦
49-978 49-902	169-209	Shelf	142-137	Diamond Sapphire	Plastic Escutcheon	No	ZENITH Stereophonic High Fidelity - Crest	None	♦
49-978 49-902	169-209	Shelf	142-137	Diamond Sapphire	Plastic Escutcheon	No	ZENITH Stereophonic High Fidelity - Crest	None	♦
49-978 49-902	169-209	Shelf	142-137	Diamond Sapphire	Plastic Escutcheon	No	ZENITH Stereophonic High Fidelity - Crest	None	♦
49-978 49-902	169-209	Shelf	142-137	Diamond Sapphire	Plastic Escutcheon	No	ZENITH Stereophonic High Fidelity - Crest	None	♦
49-978 49-902	169-209	Shelf	142-137	Diamond Sapphire	Plastic Escutcheon	No	ZENITH Stereophonic High Fidelity - Crest Stereophonic - FM	None	♦
49-978 49-902	169-209	Shelf	142-137	Diamond Sapphire	Plastic Escutcheon	No	ZENITH Stereophonic High Fidelity - Crest Stereophonic - FM	None	♦
49-978 49-978	169-209	Shelf	142-137	Diamond Sapphire	Plastic Escutcheon	No	ZENITH Stereophonic High Fidelity - Crest Stereophonic - FM	None	♦
49-978 49-902	169-209	Shelf	142-137	Diamond Sapphire	Plastic Escutcheon	No	ZENITH Stereophonic High Fidelity - Crest Stereophonic - FM	None	♦
49-978 49-902	169-226	Shelf	142-143	Diamond Sapphire	Plastic Escutcheon	No	ZENITH Stereophonic High Fidelity - Crest	Yes	♦

FEATURES OF HIGH FIDELITY & STEREO FM MODELS

MODE L NO.	CABINET				CHASSIS			SPEAKER		
	STYLE	MATERIAL	FINISH	COLOR	MODEL	TYPE	EIA POWER OUTPUT	SIZE (IN.)	MAGNET (WT.OZ.)	V.C. IMPEDANCE
RM26 01W	Console (lift lid)	Wood	Wood	Walnut	3L02 6L01	Phono-AM-FM	5W	4-3 1/2 2-6 x 9	.46 3.16	45.0 6.4
MM26 01W	Console (lift lid)	Wood	Wood	Walnut	3L02 7L01	Phono-AM-FM	5W	4-3 1/2 2-6 x 9	.46 3.16	45.0 6.4
MM26 03H	Console (lift lid)	Wood	Wood	Cherry	3L02 7L01Z	Phono-AM-FM	5W	4-3 1/2 2-6 x 9	.46 3.16	45.0 6.4
MM26 03R	Console (lift lid)	Wood	Wood	Mahogany	3L02 7L01Z	Phono-AM-FM	5W	4-3 1/2 2-6 x 9	.46 3.16	45.0 6.4
MM26 04W	Console (lift lid) (Pivotal Louver Doors)	Wood	Wood	Walnut	3L02 7L01	Phono-AM-FM	5W	4-3 1/2 2-10 2-4	.46 6.8 .68	45.0 6.4 45.0
MM26 06W	Console (lift lid)	Wood	Wood	Walnut	10MT25 8L1T20	Phono-AM-FM	20W	4-3 1/2 2-5 2-12	.46 1.47 6.8	45.0 8.0 16.0
MM26 07H	Console (lift lid)	Wood	Wood	Cherry	10MT25 8L1T20	Phono Only	20W	4-3 1/2 2-5 2-12	.46 1.47 6.8	45.0 8.0 16.0
MM26 08W	Console (lift lid)	Wood	Wood	Walnut	10MT26 8LT20Z MLT15	Phono-AM-FM	40W	4-3 1/2 2-Horn 2-12	.46 1.33 6.8	45.0 6.4 6.4
MM261 0M	Console (lift lid)	Wood	Wood	Maple	10MT26 8LT20Z MLT15	Phono-AM-FM	40W	4-3 1/2 2-Horn 2-12	.46 1.33 6.8	45.0 6.4 6.4
MM26 40L	Console (lift lid)	Wood	Wood	Butternut	10MT26 8L1T20Z MLT15	Phono-AM-FM	40W	4-3 1/2 2-Horn 2-12	.46 1.33 6.8	45.0 6.4 6.4
MM26 05H	Console (lift lid) (Pivotal Louver Doors)	Wood	Wood	Cherry	10MT26 8L1T20Z MLT15	Phono-AM-FM	40W	4-3 1/2 2-Horn 2-12	.46 1.33 6.8	45.0 6.4 6.4
MM267 0W	Console (lift lid) (Pivotal Louver Doors)	Wood	Wood	Walnut	10M9T25 8MT25	Phono-AM-FM	120W	4-3 1/2 2-Horn 2-12	.46 4.28 13.0	45.0 8.0 6.4
MM267 0R	Console (lift lid) (Pivotal Louver Doors)	Wood	Wood	Mahogany	10M9T25 8MT25	Phono-AM-FM	120W	4-3 1/2 2-Horn 2-12	.46 4.28 13.0	45.0 8.0 6.4
MM267 5R	Console (lift lid)	Wood	Wood	Mahogany	10M9T25 8MT25	Phono-AM-FM	120W	4-3 1/2 2-Horn 2-12	.46 4.28 13.0	45.0 8.0 6.4
MM268 5H	Console (lift lid)	Wood	Wood	Cherry	10M9T25 8MT25	Phono-AM-FM	120W	4-3 1/2 2-Horn 2-12	.46 4.28 13.0	45.0 8.0 6.4
RM278 4WU	Console (lift lids)	Wood	Wood	Walnut	16M24 7L22	TV - Phono AM - FM	8.5W	2-3 1/2 2-8	.46 3.16	45.0 6.4

FEATURES OF HIGH FIDELITY & STEREO FM MODELS

SPEAKER NO.	RECORD CHANGER (SEE NOTES)				CONTROL PANEL	INDI-CATOR LIGHT	TYPE OF IDENTIFICATION AND SPECIAL FEATURES	RECORD STORAGE	RADIAL SOUND SPEAKER
	TYPE	MOUNTING	CART-RIDGE	STYLUS					
49-978 49-902	169-226	Shelf	142-143	Diamond Sapphire	Plastic Escutcheon	No	ZENITH Stereophonic High Fidelity - Crest	Yes	♦
49-978 49-902	169-226	Shelf	142-143	Diamond Sapphire	Plastic Escutcheon	No	ZENITH Stereophonic High Fidelity - Crest Stereophonic - FM	Yes	♦
49-978 49-902	169-226	Shelf	142-143	Diamond Sapphire	Plastic Escutcheon	No	ZENITH Stereophonic High Fidelity - Crest Stereophonic - FM	Yes	♦
49-978 49-902	169-226	Shelf	142-143	Diamond Sapphire	Plastic Escutcheon	No	ZENITH Stereophonic High Fidelity - Crest Stereophonic - FM	Yes	♦
49-978 49-1043 49-1044	169-226	Shelf	142-143	Diamond Sapphire	Plastic Escutcheon	No	ZENITH Stereophonic High Fidelity - Crest Stereophonic - FM	Yes	♦
49-978 49-1028 49-1027	169-226	Shelf	142-143	Diamond Sapphire	Die-Cast Escutcheon	No	ZENITH Transistor Stereophonic High Fidelity - Crest	Yes	KR102, MR102
49-978 49-1028 49-1027	169-226	Shelf	142-143	Diamond Sapphire	Die-Cast Escutcheon	No	ZENITH Transistor Stereophonic High Fidelity - Crest Stereophonic - FM	Yes	KR102, MR102
49-979 49-1042 49-1045	169-226	Shelf	142-143	Diamond Sapphire	Die-Cast Escutcheon	No	ZENITH Transistor Stereophonic High Fidelity - Crest Stereophonic - FM	Yes	KR105, MR105
49-978 49-1042 49-1045	169-226	Shelf	142-143	Diamond Sapphire	Die-Cast Escutcheon	No	ZENITH Transistor Stereophonic High Fidelity - Crest Stereophonic - FM	Yes	KR105, MR105
49-978 49-1042 49-1045	169-227	Shelf	142-143	Diamond Sapphire	Die-Cast Escutcheon	No	ZENITH Transistor Stereophonic High Fidelity - Crest Stereophonic - FM	Yes	KR105, MR105
49-978 49-1042 49-1045	169-227	Shelf	142-143	Diamond Sapphire	Die-Cast Escutcheon	No	ZENITH Transistor Stereophonic High Fidelity - Crest Stereophonic - FM	Yes	KR105, MR105
49-978 49-1004 or 49-1017 49-1048	169-228	Shelf	142-143	Diamond Sapphire	Die-Cast Escutcheon	Yes	ZENITH Extended Stereophonic High Fidelity - Crest Stereophonic - FM	Yes	KR105, MR105
49-978 49-1004 or 49-1017 49-1048	169-228	Shelf	142-143	Diamond Sapphire	Die-Cast Escutcheon	Yes	ZENITH Extended Stereophonic High Fidelity - Crest Stereophonic - FM	Yes	KR105, MR105
49-978 49-1004 or 49-1017 49-1048	169-228	Shelf	142-143	Diamond Sapphire	Die-Cast Escutcheon	Yes	ZENITH Extended Stereophonic High Fidelity - Crest Stereophonic - FM	Yes	KR105, MR105
49-978 49-1004 or 49-1017 49-1048	169-228	Shelf	142-143	Diamond Sapphire	Die-Cast Escutcheon	Yes	ZENITH Extended Stereophonic High Fidelity - Crest Stereophonic - FM	Yes	KR105, MR105
49-978 49-1018	169-225	Shelf	142-142	Sapphire Sapphire	Leatherette on Cabinet	No	ZENITH Stereophonic High Fidelity - Crest ALL CHANNEL	None	♦

FEATURES OF HIGH FIDELITY & STEREO FM MODELS

MODEL NO.	CABINET				CHASSIS			SPEAKER		
	STYLE	MATERIAL	FINISH	COLOR	MODEL	TYPE	EIA POWER OUTPUT	SIZE (IN.)	MAGNET (WT.OZ.)	V.C. IMPEDANCE
RM2784RU	Console (lift lids)	Wood	Wood	Mahogany	16M24 7L22	TV - Phono AM - FM	8.5W	2-3 1/2 2-8	.46 3.16	45.0 6.4
MM2784WU	Console (lift lids)	Wood	Wood	Walnut	16M24 9M1T22	TV - Phono AM - FM	8.5W	2-3 1/2 2-8	.46 3.16	45.0 6.4
MM2784RU	Console (lift lids)	Wood	Wood	Mahogany	16M24 9M1T22	TV - Phono AM - FM	8.5W	2-3 1/2 2-8	.46 3.16	45.0 6.4
MM2785HU	Console (lift lids)	Wood	Wood	Cherry	16M24 9M1T23	TV - Phono AM - FM	8.5W	2-3 1/2 2-4 2-10	.46 .46 3.16	45.0 45.0 6.4
MM2785MU	Console (lift lids)	Wood	Wood	Maple	16M24 9M1T23	TV - Phono AM - FM	8.5W	2-3 1/2 2-4 2-10	.46 .46 3.16	45.0 45.0 6.4
7100WU	Console (lift lids)	Wood	Wood	Walnut	25MC30 4L22 MLT15 (8L1T20Z)	Color TV-Phono AM - FM	8.5W	2-3 1/2 2-10	.85 6.8	16.0 6.4
7100HU	Console (lift lids)	Wood	Wood	Cherry	25MC30 4L22 MLT15 (8L1T20Z)	Color TV-Phono AM - FM	8.5W	2-3 1/2 2-10	.85 6.8	16.0 6.4
7100MU	Console (lift lids)	Wood	Wood	Maple	25MC30 4L22 MLT15 (8L1T20Z)	Color TV-Phono AM - FM	8.5W	2-3 1/2 2-10	.85 6.8	16.0 6.4
7300WU	Console (lift lids) (sliding doors)	Wood	Wood	Walnut	25MC30 10MT25 MLT15 (8L1T20Z)	Color TV-Phono AM - FM	20W	2-3 1/2 2-10 2-5	.85 6.8 1.47	45.0 16.0 8.0
7500WU6	Console (lift lids) (folding doors)	Wood	Wood	Walnut	25MC30 10M9T25 8MT25	Color TV-Phono AM - FM	120W	4-3 1/2 2-Horn 2-12	.46 4.28 13.0	45.0 8.0 6.4
KR102W	Table	Wood	Wood	Walnut	----	----	----	3 1/2 6 x 9	.46 3.16	45.0 6.4
MR102W	Table	Wood	Wood	Walnut	----	----	----	3 1/2 6 x 9	.46 3.16	45.0 6.4
KR105W	Table	Wood	Wood	Walnut	----	----	----	Horn 6 x 9	4.28 3.16	16.0 6.4
MR105	Table	Wood	Wood	Walnut	----	----	----	Horn 6 x 9	1.33 3.6	6.4 6.4

♦ DENOTES MODELS WHICH HAVE PROVISIONS FOR FIELD INSTALLATION OF RADIAL SPEAKER ADAPTER KIT THAT WILL PERMIT USE OF EITHER KR102 OR MR102 RADIAL SOUND SPEAKERS.

FEATURES OF HIGH FIDELITY & STEREO FM MODELS

SPEAKER NO.	RECORD CHANGER (SEE NOTES)				CONTROL PANEL	INDI-CATOR LIGHT	TYPE OF IDENTIFICATION AND SPECIAL FEATURES	RECORD STORAGE	RADIAL SOUND SPEAKER
	TYPE	MOUNTING	CART-RIDGE	STYLUS					
49-978 49-1018	169-225	Shelf	142-142	Sapphire Sapphire	Leatherette on Cabinet	No	ZENITH Stereophonic High Fidelity - Crest ALL CHANNEL	None	♦
49-978 49-1018	169-225	Shelf	142-142	Sapphire Sapphire	Leatherette on Cabinet	No	ZENITH Stereophonic High Fidelity - Crest Stereophonic - FM ALL CHANNEL	None	♦
49-978 49-1018	169-225	Shelf	142-142	Sapphire Sapphire	Leatherette on Cabinet	No	ZENITH Stereophonic High Fidelity - Crest Stereophonic - FM ALL CHANNEL	None	♦
49-978 49-1012 49-985	169-226	Shelf	142-143	Diamond Sapphire	Die-Cast Escutcheon	Yes	ZENITH Stereophonic High Fidelity - Crest Stereophonic - FM ALL CHANNEL	None	KR102, MR102
49-978 49-1012 49-985	169-226	Shelf	142-143	Diamond Sapphire	Die-Cast Escutcheon	Yes	ZENITH Stereophonic High Fidelity - Crest Stereophonic - FM ALL CHANNEL	None	KR102, MR102
49-782 49-961	169-226	Shelf	142-143	Diamond Sapphire	Die-Cast Escutcheon	No	ZENITH ALL CHANNEL COLOR TV-Color Emblem Crest Stereophonic High Fidelity Stereophonic FM	None	KR102, MR102
49-982 49-961	169-226	Shelf	142-143	Diamond Sapphire	Die-Cast Escutcheon	No	ZENITH ALL CHANNEL COLOR TV-Color Emblem Crest Stereophonic High Fidelity Stereophonic FM	None	KR102, MR102
49-982 49-961	169-226	Shelf	142-143	Diamond Sapphire	Die-Cast Escutcheon	No	ZENITH ALL CHANNEL COLOR TV-Color Emblem Crest Stereophonic High Fidelity Stereophonic FM	None	KR102, MR102
49-978 49-1035 49-1028	169-228	Shelf	142-143	Diamond Sapphire	Die-Cast Escutcheon	No	ZENITH ALL CHANNEL COLOR TV-Color Emblem Crest Transistor Stereophonic High Fidelity - Stereophonic FM SPACE COMMAND FOUR HUNDRED	None	KR102, MR102
49-978 49-1004 49-1048	169-228	Shelf	142-143	Diamond Sapphire	Die-Cast Escutcheon	Yes	ZENITH ALL CHANNEL COLOR TV-Color Emblem Crest Stereophonic High Fidelity-Stereophonic FM SPACE COMMAND FOUR HUNDRED	None	KR105, MR105
49-978 49-984	----	----	----	----	----	No	ZENITH Radial Sound	----	----
49-978 49-984	----	----	----	----	----	No	ZENITH Radial Sound	----	----
49-867 49-984	----	----	----	----	----	No	ZENITH Radial Sound	----	----
49-1042 49-984	----	----	----	----	----	No	ZENITH Radial Sound	----	----

GENERAL

MUTING CONTROL

The 25K muting control which supplies a back bias voltage to the cathode of the 19KC pilot amplifier is factory adjusted, and should not require readjustment. However, if the receiver is operated in an extremely noisy area, there is a possibility that there may be noise bursts of sufficient magnitude to overcome this mute voltage . . . when this occurs, the Stereophonic FM Indicator will light up. To further cut off the 19 KC pilot amplifier, carefully rotate the 25KC muting control in a counter clockwise direction. This should only be done when a stereo signal is on the air since the mute control must only be advanced to a point where the Stereo Indicator does not light up on noise, but it should not be advanced to a point where the desired stereo signal is cut off.

More precise adjustment of the mute control can be made by using the SPTE-1 multiplex generator. This procedure is described in the multiplex alignment procedure included in this manual.

MULTIPLEX ALIGNMENT

These receivers have been properly aligned at the factory and will not require further adjustment. As a result, it is not recommended that any attempt be made to alter the multiplex stages. However, should any major components in these circuits require replacement or should anyone tamper with the multiplex adjustments then, of course, realignment will be necessary.

Zenith has designed and manufactured an SPTE-1 Multiplex Generator that can be used to properly align the multiplex portion of these receivers. The multiplex alignment procedure is included in later pages of this manual. The SPTE-1 Multiplex Generator is available at your Zenith Distributor.

ANTENNAS FOR STEREO FM

Due to the characteristics of the stereo FM system, it will require more signal for proper performance than does monaural FM. As a result, it may be necessary to operate the stereo FM receiver with an external antenna. The necessity for an external antenna will be determined by the signal conditions at each individual installation.

EXTERNAL FM ANTENNA

If the receiver is operated in an area of either low signal strength, high noise, or where multipath (FM ghosts) signals are present, a good external FM antenna will be required. The necessity of an external antenna as a result of weak signal or noise, will be quite evident since the set will not limit, and/or noise will be quite evident. It is extremely difficult to determine if multipath (FM ghosts) signals are present, however, should the program material be distorted, the best manner to decide if multipath signals are the cause of the problem, is to connect an external FM antenna to the receiver. Usually a TV antenna may be available for trial, but even then the results can be misleading, since many TV antennas are of low gain on FM frequencies.

FM CABINET ANTENNA

All models except the LPM95 and MJ1035-1 contain an FM antenna built into the cabinet. This antenna consists of a length of wire cut to the desired frequency, and attached to the internal periphery of the cabinet. The LPM95 & MJ1035-1 use a built-in line antenna.

SIGNAL STRENGTH CHART

There are certain minimum voltages necessary for proper stereo FM reception. To help determine if there is sufficient signal available, the following developed AGC voltage versus microvolt input voltage charts have been compiled. Since the desired FM Station may not always be operating in the stereo mode when an installation is made, these AGC voltage measurements have been taken with a monaural FM signal. The point "*" of minimum AGC voltage necessary for good stereo FM reception has been indicated on these charts. For chassis 8L1T20Z, 9M1T22, 9M1T22Z, 9M1T23, 9M1T23Z, 10M9T25 and 10M9T25Z connect a V.T.V.M. to the rear terminal of the FM antenna coil. This is the AGC line connected to Pin #2 of the 6JK8 or 17JK8 RF amplifier.

For chassis 7L01 and 10LO2Z connect a V.T.V.M. to the feed-thru condenser on the top of the chassis, 3/8 of an inch to the right of the FM antenna coil. A green wire is connected to this feed-thru condenser.

Chassis 8L1T20Z, 9M1T22, 9M1T22Z, 9M1T23, 9M1T23Z and 11J01

Micro-volts Input	AGC Voltage at RF Coil
0	.8
25	.95
50	1.27
100	1.6
200	1.95
500	2.35
1 K	*2.7
5 K	3.6
10 K	4.0
20 K	4.5
50 K	5.1
100 K	5.6

Chassis 7L01

Micro-volts Input	AGC Voltage at RG Grid
0	0.35 V
20	1.50
50	1.99
100	2.32
200	2.62
500	3.00
1 K	*3.30
5 K	5.40
10 K	7.20
20 K	9.0
50 K	12.0
100 K	14.0

Chassis 10L02Z

Micro-volts Input	AGC Voltage at RF Coil
0	.46
20	.85
50	1.34
100	1.71
200	2.0
500	2.43

Chassis 10L02Z (Cont'd.)

Micro-volts Input	AGC Voltage at RF Coil
1 K	*2.73
5 K	3.45
10 K	3.9
20 K	4.4
50 K	5.2
100 K	6.1

Chassis 10M9T25 and 10M9T25Z

Micro-volts Input	AGC Voltage at RF Coil
0	.75
10	.82
20	.9
50	1.32
100	1.72
200	2.1
500	2.6
1 K	*2.95
2 K	3.3
5 K	3.85
10 K	4.3
20 K	4.8
50 K	5.3
100 K	6.0

AUTOMATIC FREQUENCY CONTROL AFC

These receivers feature an automatic frequency control which automatically keeps your receiver on the exact station frequency when you are tuned to an FM station. To utilize this feature tune the receiver as instructed and then turn the band switch to AFC position.

When the desired FM station is a weak station, adjacent in frequency to a strong station, the AFC may pull the tuning into the stronger station. Under these conditions, place the bandswitch in FM position and tune the receiver as instructed.

Tuning the receivers on the frequency modulation band will require more care than on the broadcast band. A hissing sound may be noted when tuning between Frequency Modulation stations. This is normal, and will disappear as the station is tuned in. After a station is located, the pointer should be moved back and forth over it until the point of quietest reception and best tone quality is found. Correct tuning is indicated by the disappearance of background noise.

SPEAKER PHASING

It is most important that coded speaker leads be connected to coded terminals on speakers for proper polarity within each speaker group. It is also then most important that the speaker groups be in phase with each other. One excellent method is to play a monaural record as described under Automatic Balance Control.

Under these conditions the sound should appear to come from a point midway between the two speaker groups. If the sound comes from any other point than midpoint, then one speaker group is out of phase with the other and you should check polarity. One of the easiest methods of checking polarity within the speaker group is to momentarily place a 4½ volt battery across the speaker feed terminals. All the speaker cones should simultaneously move in the same direction.

8MT25, 10MT25 and 10MT26 POWER AMPLIFIERS

Power transistors and their circuits are unique in operation, therefore, repair procedure differs from those steps followed when repairing tube type circuits.

1. Each channel of the 8MT25, 10MT25 and 10MT26 amplifiers use a pair of matched power transistors in the final output state. Therefore, should one transistor fail, both transistors must be replaced simultaneously, since they will not perform properly unless matched.
2. When a power transistor is replaced the insulator between the transistor and the heat sink should also be replaced. On chassis 10MT26 be certain to apply Dow Corning #340 heat conductive grease between the transistor and the insulator. Also between the insulator and the chassis.
3. Do not operate these amplifiers without their proper speaker load.
4. Do not short out the audio output of either channel when the amplifier is operating.
5. Should a power transistor fail (short) be certain to replace the emitter resistors for the specific channel. Also be certain to check the condition of the silicon diode rectifiers.
6. Remove transistors from their sockets before doing any soldering to the socket lugs.

10M9T25 & 10M9T25Z TONE LIGHT REPLACEMENT

To replace the tone lights pull off the PUSH ON – PUSH OFF, FM-AFC, TAPE, AND EXT BASS Selector Switch Knobs. Then take a stiff piece of wire shaped as in the illustration and pull out the tonal dial scale as indicated. This should be repeated at the four spots where the Selector Switch knobs have been removed. Pull off the plastic color shields to remove and replace the tone lights.

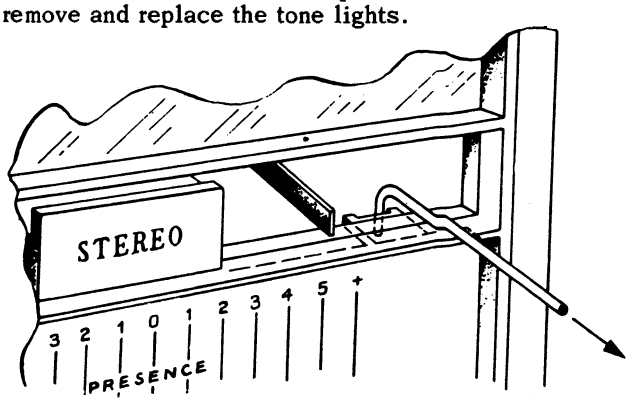

FM, RF, AND IF ALIGNMENT–CHASSIS 8L1T20Z, 9M1T22, 9M1T22Z, 9M1T23, 9M1T23Z, 10M9T25 AND 10M9T25Z

Alignment of these chassis will, in most cases, not be necessary unless an RF or IF transformer is replaced or if someone has tampered with the adjustments.

Because of the wide band pass required in the multiplex FM tuner, it is desirable to use an FM signal generator having a deviation of 400 KC with a sweep rate of 60 cycles as well as an oscilloscope when

aligning both the IF and RF FM portions of this receiver. It is not only necessary to obtain maximum amplitude in the IF amplifier stages, but also necessary to maintain symmetry. To help achieve this symmetry, it is desirable to have 10.6, 10.7, and 10.8 megacycle markers in obtaining IF curve symmetry.

The condenser mentioned further on in the alignment procedure should be as small as possible and the ground lead of the generator must be connected to the chassis at the base of the tube socket, where the signal is being injected. Should the signal be injected at some point other than a tube socket, then the ground lead should be connected to ground as closely as possible to this point.

In all alignment procedures, the signal generator output should be kept just high enough to obtain an indication. This is most necessary, since on some chassis we have a zero time constant limiter which will clip the signals if their magnitude is too great, resulting in erroneous waveforms.

A. Connect scope or V.T.V.M. to Pin #1 of the 6AU6 or 12AU6 limiter. The common scope or V.T.V.M. terminal should be connected to chassis.

B. On Chassis 8L1T20Z, 9M1T22, 9M1T22Z, 9M1T23, 9M1T23Z, 10M9T25 and 10M9T25Z connect scope or V.T.V.M. to junction of 100 ohm and 330 mmf capacitor. This 100 ohm resistor is connected to terminal #6 of the ratio detector transformer.

AM ALIGNMENT

C. An AC output meter connected across the primary or secondary of the output transformer will be satisfactory for all AM, IF, and RF adjustments.

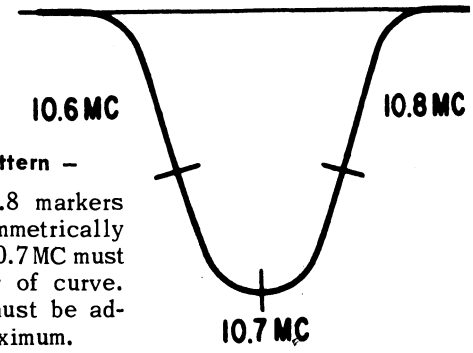

Scope Pattern –

10.6 and 10.8 markers must be symmetrically positioned. 10.7 MC must be at center of curve. This point must be adjusted for maximum.

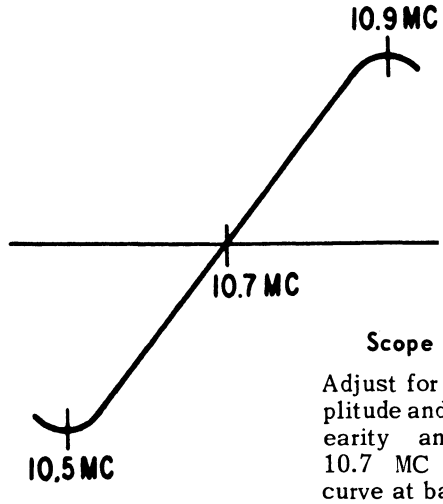

Scope Pattern –

Adjust for maximum amplitude and maintain linearity and symmetry. 10.7 MC must be on curve at base line.

THE BIPLEX DETECTOR

The 121-302 NPN transistor used in the Biplex detector circuit of the 8L1T20Z although not a bilateral transistor exhibits bilateral characteristics. As a result its function can be best explained by the operation of a normal bilateral transistor.

A bilateral transistor is a special type transistor that due to its ' uniform design, the collector will serve as the emitter and the emitter will serve as the collector under certain conditions. When switched by a properly applied AC voltage, in push-pull, sufficient in value to overcome the cut-off bias normally applied, the bilateral transistor will pass current in both directions in accordance with the alternations of the switching voltage. The switching voltage in this case is the regenerated 38 KC subcarrier signal.

The transistor is not biased in the conventional manner. For the following refer to Figure A. The base is biased at +43 volts, while the collector and emitter are both biased at +48 volts (as shown at the center-tap, terminal no. 6 of transformer T10). The 48V and 43V are obtained from the voltage dividers consisting of two 33K ohm resistors in the power supply, the 22K ohm resistor in the base to terminal no. 6 lead of T10, and the 220K ohm resistor from transistor base to ground. Note that the collector and emitter are connected to the opposite ends of the 38KC output transformer secondary winding (part of T10). Under no-switching--voltage conditions, the transistor is biased to cut off due to the 5 volts difference between the 43 volts at the base and the 48 volts at the emitter. To forward bias the transistor, to cause current to flow, the voltage at the emitter must be negative or less positive than the voltage at the base. This required forward bias is supplied by the regenerated 38KC subcarrier (a CW signal) when the value of the 38KC voltage exceeds the reverse bias.

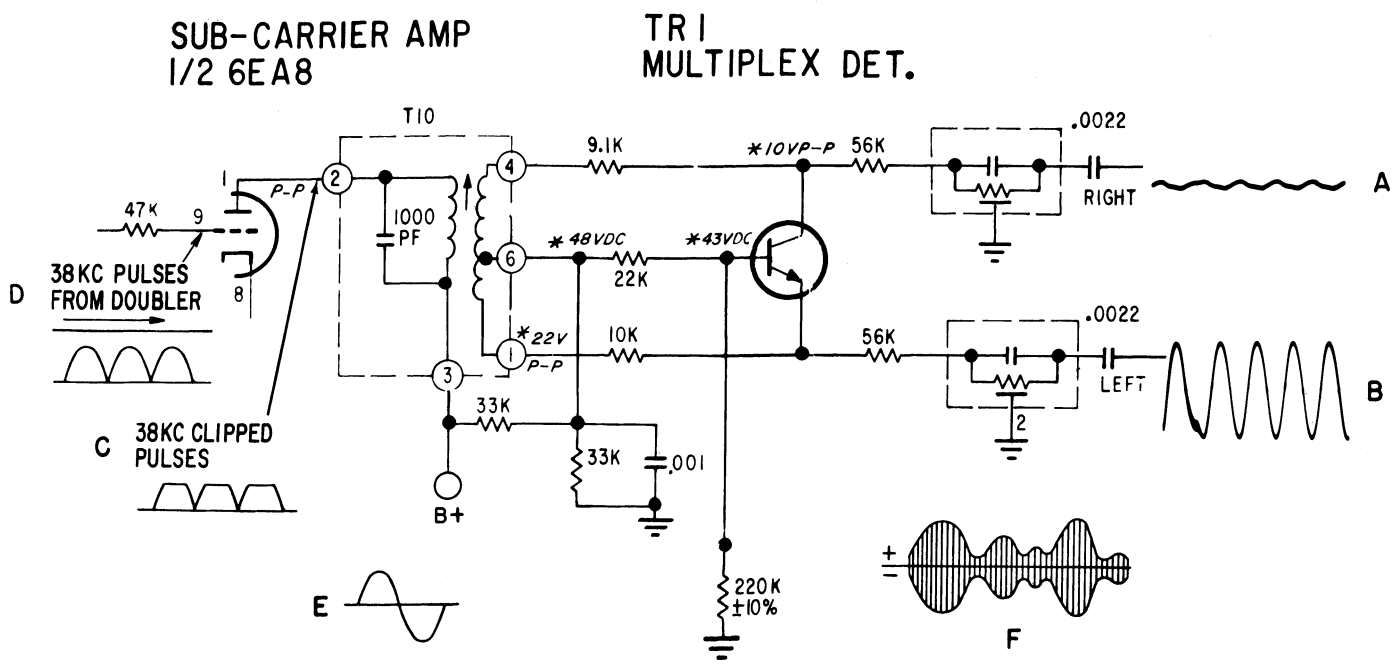

Figure A – 8L1T20Z Biplex Detector Circuit

Referring to Figure B showing the input and output waveforms of the 38KC switching signal only, note that the lower 38KC input wave supplies the negative bias from the emitter to the base on the first half-cycle, while at the same time, the upper wave supplies the positive bias from the collector to the base. During the second half-cycle just the reverse is true, but the action of the transistor is the same, due to the bilateral effect.

The important point here is that because the transistor has bilateral characteristics, the emitter is as shown in the schematic for the first half-cycle but the emitter and collector change places when the switching signal changes polarity in the second half-cycle. As a result, current flows between the collector and emitter in both half-cycles, reversing directions in accordance with the alternations of the 38KC switching signal. The path of current flow in the external circuit is through the two load resistors (9.1K and 10K) and the secondary winding of T10. The output is taken from across the emitter and collector of the transistor and is labeled "L" and "R" in the schematic.

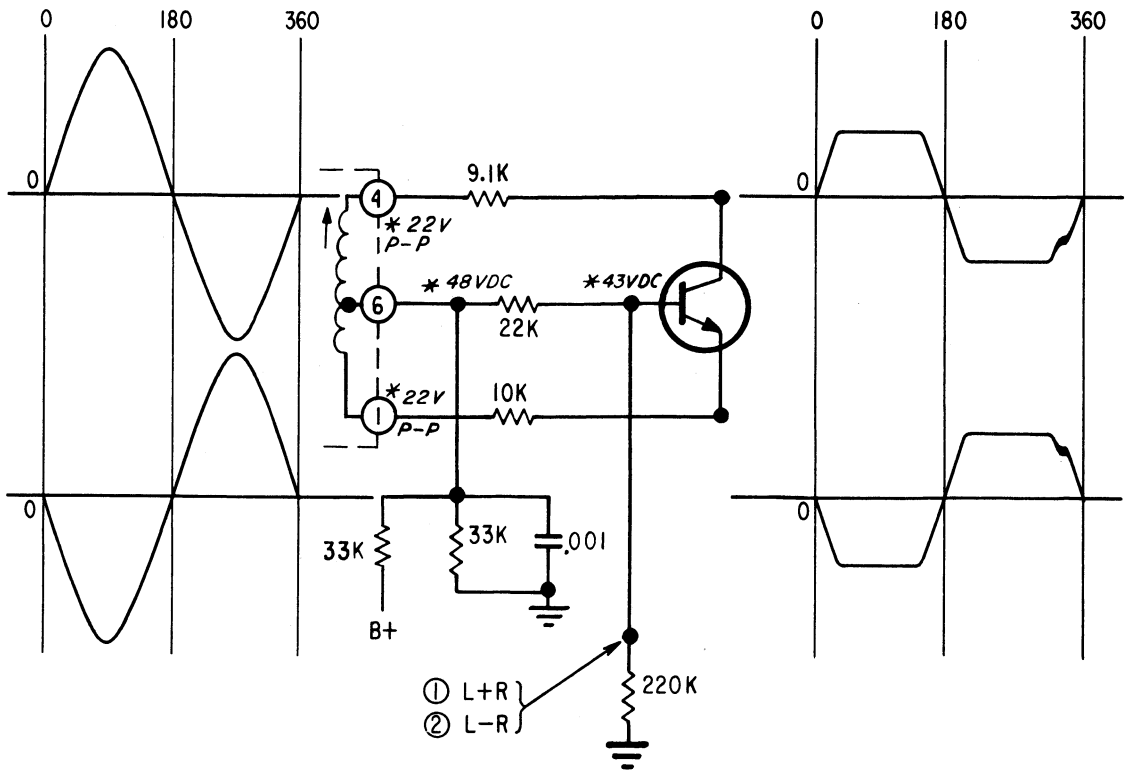

Figure B – Biplex Detector with Theoretical 38KC Input & Output Waveforms

Referring to Figure C showing input and output waveforms for operation of the circuit with 38RC & (L-R) 38KC side band inputs. Note that the composite stereo signal, taken off in the receiver just after the 67KC wave trap (T11 in the schematic) is applied to the base of the transistor while it is being switched at the 38KC rate. The composite signal consists of two interleaved components, the (L + R) or regular audio signal and (L - R) 38KC sidebands. The (L + R) signal can appear at the L and R output terminals only by the way of the T10 transformer secondary, because any (L + R) signal passing through via the base of the transistor is modulated upward and out of the audio range by the 38KC switching signal. The demodulated (L - R) signal can appear at the L and R output terminals only by way of the base circuit of the transistor, because the (L - R) 38KC side bands are greatly attenuated at pin 6 of the transformer (T10) by the network consisting of the 33K ohm resistor to ground, shunted by the .001 MF capacitor.

In operation, the (L + R) audio signal appears at the "L" and "R" output circuits in equal magnitudes of the same polarity. The relatively few turns of wire in the 38KC transformer secondary winding represent a low impedance path for the (L + R) signal. The (L – R) 38KC side bands are demodulated by the action of the transistor into two equal amplitude but opposite polarity (L – R) regular audio signals in the same L and R output circuits. The biplex transistor circuit thus acts to reinsert the 38KC CW (the subcarrier) into the (L – R) 38KC side bands and at the same time demodulates this signal into the (L – R) audio signal and also provides the matrixing of the two sets of audio signals (L + R) and (L – R) according to the formulae:

$$(L - R) + (L + R) = 2L$$
$$-(L - R) + (L + R) = 2R$$

The demodulation efficiency of the Multiplex "average type" detectors used previously was around 30%. The demodulation efficiency of the Biplex Detector circuit is around 60%. Furthermore, the L and R channel separation is improved about 6DB at the higher audio frequencies between 8KC and 15KC. The present circuit is designed to provide about 25 db of separation of the L and R signals at 1000 cycles.

One of the most desirable features of the Biplex detector is that when tuning across the dial, both stereo and non-stereo (monophonic) stations are received at approximately the same volume level.

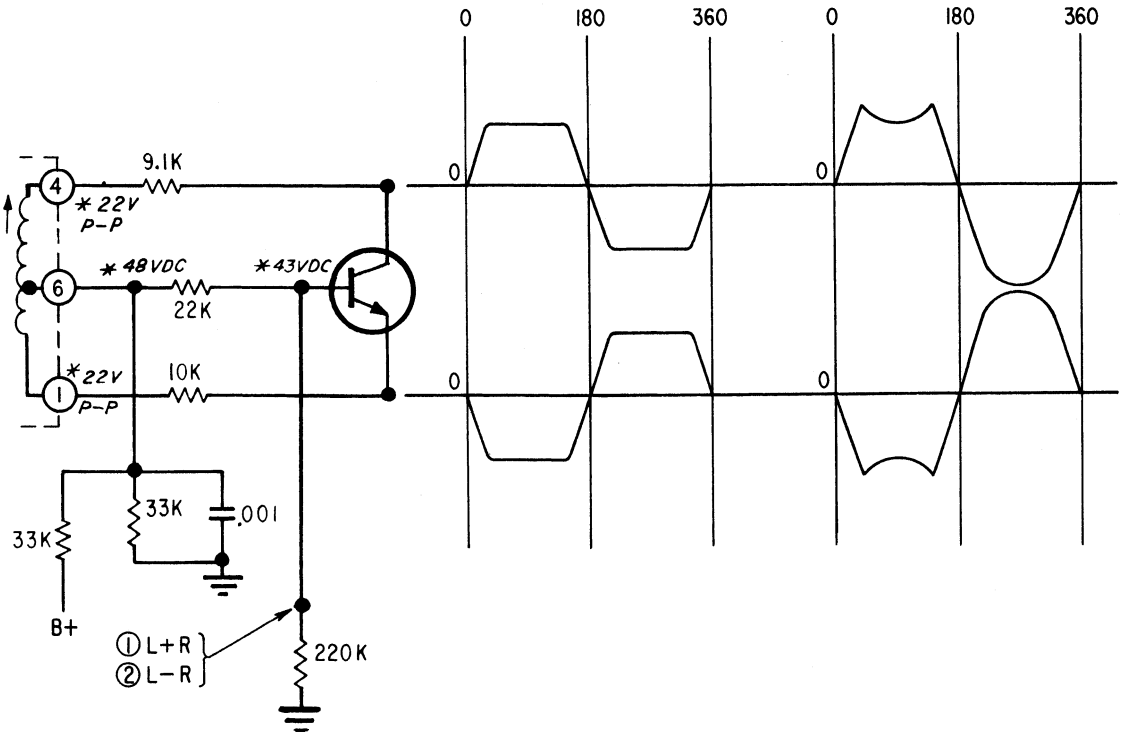

Figure C – Biplex Detector with Theoretical 38KC & (L–R) 38KC Side Band Output Waveforms

During monophonic (non-stereo) FM transmissions, the 19KC pilot signal is not transmitted. If the 38KC switching signal is not applied to the transistor, it will remain at cut-off. In this case the (L + R) audio signal will be divided equally in the two channels via the two half-sections of the transformer (the secondary winding of T10).

SIMPLIFIED CHECK OF THE BIPLEX TRANSISTOR

A simple quality check on the transistor (TR1) can be made as follows:

Connect a large (5-10 MF) capacitor from pin 6 of the transformer T10 to chassis ground, to kill the signal at this point so that only the (L – R) signal is obtained in the output via the base of the transistor.

The transistor is good, if after tuning across the dial only stereo stations are received. The transistor is defective, if both stereo and non-stereo stations are heard at or near the same volume level. (The stereo stations will light up the stereo indicator lamp.)

When replacing a defective transistor, it is necessary to put the replacement transistor in the circuit exactly as it was before. The transistor is soldered into the circuit. Use extreme care in removing and replacing it. Heat sink the wires by grasping them with long nosed pliers between the transistor and the soldering point, so that the transistor is not over heated. The location in the circuit of the two load resistors 9.1K and 10K ohms must not be changed or poor separation results will be obtained.

38 KC RIGHT OUTPUT

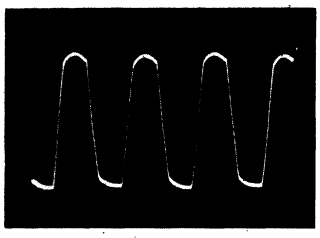

38 KC(L-R) RIGHT OUTPUT

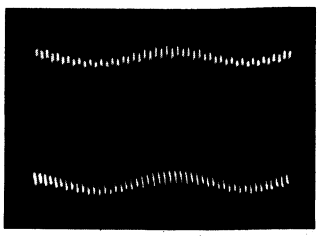

38 KC(L-R)(L+R) RIGHT OUTPUT

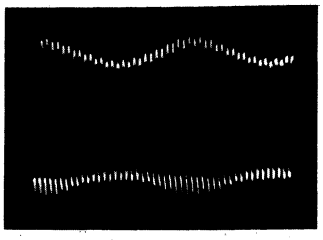

38 KC(L-R)(L+R) RIGHT OUTPUT AFTER 38 KC FILTER

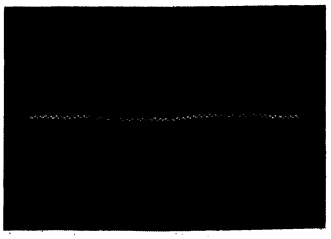

38 KC LEFT OUTPUT

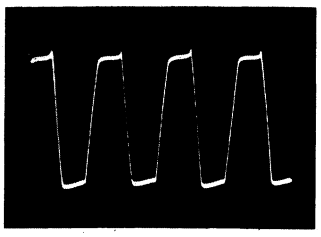

38 KC(L-R) LEFT OUTPUT

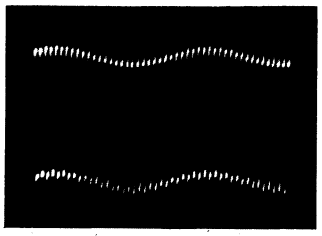

38 KC(L-R)(L+R) LEFT OUTPUT

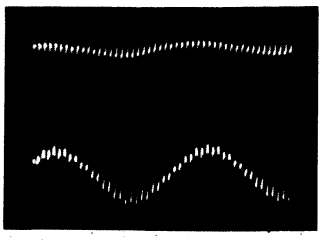

38 KC(L-R)(L+R) LEFT OUTPUT AFTER 38 KC FILTER

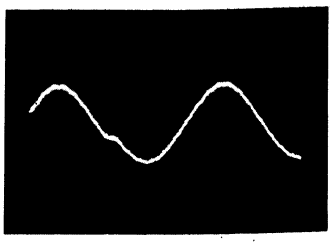

SIGNAL TRACING BIPLEX DETECTOR

CHANGER, CARTRIDGE AND STYLUS INFORMATION

CHANGER	CARTRIDGE	STYLII	DESCRIPTION
	142-95	1.0 56-371	Sapphire
		3.0 56-372	Sapphire
169-191	142-125	1.0 56-371	Sapphire
		3.0 56-372	Sapphire
169-192	142-124	.7 56-480	Sapphire
		3.0 56-372	Sapphire
169-209	142-137	S-62649	Diamond-Sapphire
169-225	142-142	S-62648	Sapphire-Sapphire
169-226	142-143	S-62649	Diamond-Sapphire
169-227	142-143	S-62649	Diamond-Sapphire
169-228	142-143	S-62649	Diamond-Sapphire
169-229	142-113	2.5 56-441B	Sapphire
		.75 56-442B	Sapphire
169-230	142-142	S-62648	Sapphire-Sapphire
169-231	142-143	S-62649	Diamond-Sapphire
169-232	142-143	S-62649	Diamond-Sapphire
169-233	142-143	S-62649	Diamond-Sapphire
169-234	142-142	S-62648	Sapphire-Sapphire
169-235	142-142	S-62648	Sapphire-Sapphire
169-236	142-146	1.0 56-525	Sapphire
		2.5 56-524	Sapphire
169-237	142-124	.7 56-480	Sapphire
		3.0 56-372	Sapphire
169-238	142-146	2.5 56-524	Sapphire
		1.0 56-525	Sapphire
169-239	142-124	3.0 56-372	Sapphire
		.7 56-480	Sapphire

NEUTRALIZING 6JK8 R.F. AMPLIFIER

Equipment – Bias Supply (Variable 0 to 20 Volts)

1. Tune receiver to 108 mc.
2. Insert a 108 mc R.F. signal at FM-G antenna terminals.
3. Connect V.T.V.M. or scope to Pin #1 grid of the 6AU6 limiter. The common scope or V.T.V.M. terminal should be connected to chassis.
4. Remove the AGC line from the tuner feed-through and connect the (–) negative lead of the bias supply to this point. Connect the (+) terminal to chassis.
5. Adjust the bias supply to approximately -10 volts.
6. Carefully vary the position of the two wires adjacent to the body of C5 until minimum output is obtained, from the limiter grid test point.

RF AND IF ALIGNMENT CHASSIS 6L01, 7L01, 7L22 AND 10L02Z

Alignment of these chassis will, in most cases, be unnecessary unless an IF or RF transformer is replaced or the adjustments have been tampered with.

FM Discriminator Alignment: When the secondary of the discriminator is aligned (operation 5) use sufficient signal input to get a good positive and negative indication before setting the slug for zero reading. A center zero indicating meter is recommended for this adjustment, but is not absolutely necessary. Reversing the leads of a non-zero center meter, or observing closely when the meter starts to go to the left (negative) of zero will give the same results.

FM IF Alignment: Because of the wide band pass, it is desirable to use an FM signal generator and a cathode ray oscilloscope when aligning the FM IF channel. The instruction book for the Zenith Model 800 Signal Generator (Form Z8001) covers complete FM alignment procedure. If visual alignment equipment is unavailable, reasonably accurate alignment can be made by following the procedure outlined in this service note.

Correct alignment can only be made if the following procedure is followed:

A vacuum tube voltmeter with an isolation resistor of 2,000,000 ohms in series with the hot lead will serve for FM adjustments. This lead should be shielded.

The signal generator output should be kept just high enough to get an indication on the meter.

OPERATION	CONNECT OSCILLATOR TO	DUMMY ANTENNA	INPUT SIGNAL FREQUENCY	BAND	SET DIAL TO	ADJUST	PURPOSE
1(d)	Pin 7 12BE6 Converter	.05 Mfd.	455 Kc. 400 Cycle Modulated	BC	600 Kc.	L16, 17, 14, 15	Align IF channel for maximum output
2(d)	2 turns loosely coupled to wavemagnet		1600 Kc. 400 Cycle Modulated	BC	1600 Kc.	C19D	Set oscillator to dial scale
3(d)	2 turns loosely coupled to wavemagnet		1400 Kc. 400 Cycle Modulated	BC	1400 Kc.	C19B	Align antenna stage
4(a)	Pin 1 (grid) on 12AU6 limiter	.05 Mfd.	10.7 Mc. Unmodulated	FM		L10 coil slug pri-discr.	Align primary of discriminator for maximum reading
5(f)	Pin 1 (grid) on 12AU6 limiter	.05 Mfd.	10.7 Mc. Unmodulated	FM		L11 coil slug sec. of discr.	Adjust secondary of discriminator for zero reading
6(c)	Pin 1 (grid) on 12BA6 2nd I.F.	.05 Mfd.	10.7 Mc. Unmodulated	FM		L8 & L9 pri. & sec. of 3rd IF transf.	Align 3rd IF transf. for max. reading
7(c)	Pin 1 (grid) on 12BA6 1st IF	.05 Mfd.	10.7 Mc. Unmodulated	FM		L6 & L7 2nd IF transf.	Align 2nd IF transf. for max. reading
8(c)	Pin 2 (grid) on 12DT8 converter tube socket	.05 Mfd.	10.7 Mc. Unmodulated	FM		L4 & 5 pri. & sec. of 1st IF transf.	Align 1st IF transf. for max. reading
9(c)	Antenna Post FM	270 Ohms	98 Mc. Unmodulated	FM	98 Mc.	L3 osc. coil slug	Set osc. to dial scale
10(c)	(Remove line ant.)	270 Ohms	98 Mc. Unmodulated	FM	98 Mc.	L2 det. coil slug	Align det. stage to max. reading

RF AND IF ALIGNMENT PROCEDURE FOR CHASSIS 6L01

(a) Vacuum Tube Voltmeter Lug 1 on discriminator transformer to chassis (half discriminator load).
(c) Vacuum Tube Voltmeter from Limiter Grid to Chassis.
(d) Vacuum Tube Voltmeter Lug 2 of T6 to Chassis.
(f) Vacuum Tube Voltmeter Pin #1 of 12AL5 Disc. Tube to Chassis (full discriminator load)

OPERATION	CONNECT OSCILLATOR TO	DUMMY ANTENNA	INPUT SIGNAL FREQUENCY	BAND	SET DIAL TO	ADJUST	PURPOSE
1(d)	Pin 7 12BE6 Converter	.05 Mfd.	455 Kc. 400 Cycle Modulated	BC	600 Kc.	L8, 9, 16, 17	Align IF channel for maximum output
2(d)	2 turns loosely coupled to wavemagnet		1600 Kc. 400 Cycle Modulated	BC	1600 Kc.	C32D	Set oscillator to dial scale
3(d)	2 turns loosely coupled to wavemagnet		1400 Kc. 400 Cycle Modulated	BC	1400 Kc.	C32B	Align antenna stage
4(a)	Pin 1 (grid) on 12AU6 limiter	.05 Mfd.	10.7 Mc. Unmodulated	FM		L12 coil slug pri. discr.	Align primary of discriminator for maximum reading
5(f)	Pin 1 (grid) on 12AU6 limiter	.05 Mfd.	10.7 Mc. Unmodulated	FM		L13 coil slug sec. of discr.	Adjust secondary of discriminator for zero reading
6(c)	Pin 1 (grid) on 12BA6 2nd I.F.	.05 Mfd.	10.7 Mc. Unmodulated	FM		L10 & L11 pri. & sec. of 3rd If trans.	Align 3rd IF transf. for max. reading
7(c)	Pin 1 (grid) on 12BA6 1st IF	.05 Mfd.	10.7 Mc. Unmodulated	FM		L6 & L7 2nd IF transf.	Align 2nd IF transf. for max. reading
8(c)	Pin 2 (grid) on 12DT8 converter tube socket	.05 Mfd.	10.7 Mc. Unmodulated	FM		L4 & 5 pri. & sec. of 1st IF transf.	Align 1st IF transf. for max. reading
9(c)	Antenna Post FM	270 Ohms	98 Mc. Unmodulated	FM	98 Mc.	L3 osc. coil slug	Set osc. to dial scale
10(c)	(Remove line ant.)	270 Ohms	98 Mc. Unmodulated	FM	98 Mc.	L2 det. coil slug	Align det. stage to max. reading

RF and IF Alignment Procedure for Chassis 7L01

(a) Vacuum Tube Voltmeter Lug 1 on discriminator transformer to chassis (half discriminator load).
(c) Vacuum Tube Voltmeter from Limiter Grid to Chassis.
(d) Vacuum Tube Voltmeter Lug 2 of T3 to Chassis.
(f) Vacuum Tube Voltmeter Pin #1 of 19GQ7 Disc. Tube to Chassis (full discriminator load)

OPERATION	CONNECT OSCILLATOR TO	DUMMY ANTENNA	INPUT SIGNAL FREQUENCY	BAND	SET DIAL TO	ADJUST	PURPOSE
1(d)	Pin 7 12BE6 Converter	.05 Mfd.	455 Kc. 400 Cycle Modulated	BC	600 Kc.	L18, 19, 16, 17, 13, 14	Align IF channel for maximum output
2(d)	2 turns loosely coupled to wavemagnet		1600 Kc. 400 Cycle Modulated	BC	1600 Kc.	C28D	Set oscillator to dial scale
3(d)	2 turns loosely coupled to wavemagnet		1400 Kc. 400 Cycle Modulated	BC	1400 Kc.	C28B	Align antenna stage
4(a)	Pin 1 (grid) on 12AU6 limiter	.05 Mfd.	10.7 Mc. Unmodulated	FM		L10 coil slug pri. discr.	Align primary of discriminator for maximum reading
5(f)	Pin 1 (grid) on 12AU6 limiter	.05 Mfd.	10.7 Mc. Unmodulated	FM		L11 coil slug sec. of discr.	Adjust secondary of discriminator for zero reading
6(c)	Pin 1 (grid) on 12BA6 2nd I.F.	.05 Mfd.	10.7 Mc. Unmodulated	FM		L8 & L9 pri. & sec. of 3rd If transf.	Align 3rd IF transf. for max. reading
7(c)	Pin 1 (grid) on 12BA6 1st IF	.05 Mfd.	10.7 Mc. Unmodulated	FM		L6 & L7 2nd IF transf.	Align 2nd IF transf. for max. reading
8(c)	Pin 7 (grid) on 12DT8 converter tube socket	.05 Mfd.	10.7 Mc. Unmodulated	FM		L4 & 5 pri. & sec. of 1st IF transf.	Align 1st IF transf. for max. reading
9(c)	Antenna Post FM	270 Ohms	98 Mc. Unmodulated	FM	98 Mc.	L3 osc. coil slug	Set osc. to dial scale
10(c)	(Remove line ant.)	270 Ohms	98 Mc. Unmodulated	FM	98 Mc.	L2 det. coil slug	Align det. stage to max. reading

RF and IF Alignment Procedure for Chassis 7L22

(a) Vacuum Tube Voltmeter Lug 1 on discriminator transformer to chassis (half discriminator load).
(c) Vacuum Tube Voltmeter from Limiter Grid to Chassis.
(d) Vacuum Tube Voltmeter Lug 2 of T7 to Chassis.
(f) Vacuum Tube Voltmeter Pin #1 of 19GQ7 Disc. Tube to Chassis (full discriminator load)

OPERATION	CONNECT GENERATOR TO	DUMMY ANTENNA	INPUT SIGNAL FREQUENCY	SET DIAL TO	ADJUST IRON CORES	PURPOSE
1 B	Pin #1 12AU6 Limiter Grid	.001 mfd	10.7 Mc. 400 Kc. Deviation	88 Mc.	L20	Adjust primary and secondary of ratio detector for maximum amplitude and symmetry as shown in Scope Pattern "B"
2 B	Pin #1 12AU6 Limiter Grid	.001 mfd	10.7 Mc 400 Kc. Deviation	88 Mc.	L21	
3 A	Pin #1 12BA6 2nd I.F. Grid	.001 mfd	10.7 Mc. 400 Kc. Deviation	88 Mc.	L16, L17	Align I.F. transformers for maximum output and symmetry; this pattern is not necessarily identical to the over all Scope Pattern "A"
4 A	Pin #1 12BA6 1st I.F. Grid	.001 mfd	10.7 Mc. 400 Kc. Deviation	88 Mc.	L12, L13	
5 A	Test Point "F"	.001 mfd	10.7 Mc. 400 Kc. Deviation	88 Mc.	L4, L5	Align I.F. transformers for maximum output & symmetry as indicated in Scope Pattern "A"
6 A		.001 mfd	10.7 Mc. 400 Kc. Deviation	88 Mc.	Readjust L4, L5, L12, L13, L16, L17	
7 A	FM Antenna post (remove antenna)	300 ohms	98 Mc. 400 Kc. Deviation	98 Mc.	L3	Set Oscillator to dial scale
8 A	FM Antenna post (remove antenna)	300 ohms	98 Mc. 400 Kc. Deviation	98 Mc.	L2 & L1	Align detector and antenna stages for maximum
9 C	Pin #1 12BE6 Converter Grid	.05	455 Kc. 400 Cycle Modulated	600 Kc.	L18, L19, L14, L15, L10, L11	Align AM, I.F. for maximum
10 C	Two turn loop loosely coupled to Wavemagnet		1600 Kc. 400 Cycle Modulated	1600 Kc.	C22F	Set oscillator to dial scale
11 C	Two turn loop loosely coupled to Wavemagnet		1400 Kc. 400 Cycle Modulated	1400 Kc.	C22D, C22B	Align detector and antenna stages.

For A, B, C See Page 14

OPERATION	CONNECT OSCILLATOR TO	DUMMY ANTENNA	INPUT SIGNAL FREQUENCY	BAND	SET DIAL TO	ADJUST	PURPOSE
1(d)	Pin 7 12BE6 Converter	.05 Mfd.	455 Kc. 400 Cycle Modulated	BC	600 Kc.	L22, 23, 6, 7	Align IF channel for maximum output
2(d)	2 turns loosely coupled to wavemagnet		1600 Kc. 400 Cycle Modulated	BC	1600 Kc.	C32D	Set oscillator to dial scale
3(d)	2 turns loosely coupled to wavemagnet		1400 Kc. 400 Cycle Modulated	BC	1400 Kc.	C32B	Align antenna stage
4(a)	Pin 1 (grid) on 12AU6 limiter	.05 Mfd.	10.7 Mc. Unmodulated	FM		L14 coil slug pri-discr.	Align primary of discriminator for maximum reading
5(f)	Pin 1 (grid) on 12AU6 limiter	.05 Mfd.	10.7 Mc. Unmodulated	FM		L15 coil slug sec. of discr.	Adjust secondary of discriminator for zero reading
6(c)	Pin 1 (grid) on 12BA6 2nd I.F.	.05 Mfd.	10.7 Mc. Unmodulated	FM		L12 & L13 pri. & sec. of 3rd If transf.	Align 3rd IF transf. for max. reading
7(c)	Pin 1 (grid) on 12BA6 1st IF	.05 Mfd.	10.7 Mc. Unmodulated	FM		L10 & L11 2nd IF transf.	Align 2nd IF transf. for max. reading
8(c)	Pin 7 (grid) on 12DT8 converter tube socket	.05 Mfd.	10.7 Mc. Unmodulated	FM		L8 & 9 pri. & sec. of 1st IF transf.	Align 1st IF transf. for max. reading
9(c)	Antenna Post FM	270 Ohms	98 Mc. Unmodulated	FM	98 Mc.	L3 osc. coil slug	Set osc. to dial scale
10(c)	(Remove line ant.)	270 Ohms	98 Mc. Unmodulated	FM	98 Mc.	L2 det. coil slug	Align det. stage to max. reading

RF and IF Alignment Procedure for Chassis 10L02Z

(a) Vacuum Tube Voltmeter Lug 1 on discriminator transformer to chassis (half discriminator load).
(c) Vacuum Tube Voltmeter from Limiter Grid to Chassis.
(d) Vacuum Tube Voltmeter Lug 2 of T10 to Chassis.
(f) Vacuum Tube Voltmeter Pin #9 of 19GQ7 Disc. Tube to Chassis (full discriminator load)

OPERATION	CONNECT GENERATOR TO	DUMMY ANTENNA	INPUT SIGNAL FREQUENCY	SET DIAL TO	ADJUST IRON CORES	PURPOSE
1 B	Pin #1 12AU6 Limiter Grid	.001 mfd	10.7 Mc. 400 Kc. Deviation	88 Mc.	L15	Adjust primary and secondary of ratio detector for maximum amplitude and symmetry as shown in Scope Pattern "B"
2 B	Pin #1 12AU6 Limiter Grid	.001 mfd	10.7 Mc 400 Kc. Deviation	88 Mc.	L17	
3 A	Pin #1 12BA6 2nd I.F. Grid	.001 mfd	10.7 Mc. 400 Kc. Deviation	88 Mc.	L11, L12	Align I.F. transformers for maximum output and symmetry; this pattern is not necessarily identical to the over all Scope Pattern "A"
4 A	Pin #1 12BA6 1st I.F. Grid	.001 mfd	10.7 Mc. 400 Kc. Deviation	88 Mc.	L7, L8	
5 A	Test Point "F"	.001 mfd	10.7 Mc. 400 Kc. Deviation	88 Mc.	L4, L5	Align I.F. transformers for maximum out & symmetry as indicated in Scope Pattern "A"
6 A		.001 mfd	10.7 Mc. 400 Kc. Deviation	88 Mc.	Readjust L4, L5, L7, L8 L11, L12	
7 A	FM Antenna post (remove antenna)	300 ohms	98 Mc. 400 Kc. Deviation	98 Mc.	L3	Set Oscillator to dial scale
8 A	FM Antenna post (remove antenna)	300 ohms	98 Mc. 400 Kc. Deviation	98 Mc.	L2 & L1	Align detector and antenna stages for maximum
9 C	Pin #1 12BE6 Converter Grid	.05	455 Kc. 400 Cycle Modulated	600 Kc.	L21, L22, L9, L10, L13, L14	Align AM, I.F. for maximum
10 C	Two turn loop loosely coupled to Wavemagnet		1600 Kc. 400 Cycle Modulated	1600 Kc.	C44F	Set oscillator to dial scale
11 C	Two turn loop loosely coupled to Wavemagnet		1400 Kc. 400 Cycle Modulated	1400 Kc.	C44B, C44D	Align detector and antenna stages.

For A, B, C See Page 14

OPERATION	CONNECT GENERATOR TO	DUMMY ANTENNA	INPUT SIGNAL FREQUENCY	SET DIAL TO	ADJUST IRON CORES	PURPOSE
1 B	Pin #1 12AU6 Limiter Grid	.001 mfd	10.7 Mc. 400 Kc. Deviation	88 Mc.	L15	Adjust primary and secondary of ratio detector for maximum amplitude and symmetry as shown in Scope Pattern "B"
2 B	Pin #1 12AU6 Limiter Grid	.001 mfd	10.7 Mc 400 Kc. Deviation	88 Mc.	L17	
3 A	Pin #1 12BA6 2nd I.F. Grid	.001 mfd	10.7 Mc. 400 Kc. Deviation	88 Mc.	L11, L12	Align I.F. transformers for maximum output and symmetry; this pattern is not necessarily identical to the over all Scope Pattern "A"
4 A	Pin #1 12BA6 1st I.F. Grid	.001 mfd	10.7 Mc. 400 Kc. Deviation	88 Mc.	L7, L8	
5 A	Test Point "F"	.001 mfd	10.7 Mc. 400 Kc. Deviation	88 Mc.	L4, L5	Align I.F. transformers for maximum out & symmetry as indicated in Scope Pattern "A"
6 A		.001 mfd	10.7 Mc. 400 Kc. Deviation	88 Mc.	Readjust L4, L5, L7, L8 L11, L12	
7 A	FM Antenna post (remove antenna)	300 ohms	98 Mc. 400 Kc. Deviation	98 Mc.	L3	Set Oscillator to dial scale
8 A	FM Antenna post (remove antenna)	300 ohms	98 Mc. 400 Kc. Deviation	98 Mc.	L2 & L1	Align detector and antenna stages for maximum
9 C	Pin #1 12BE6 Converter Grid	.05	455 Kc. 400 Cycle Modulated	600 Kc.	L21, L22, L9, L10, L13, L14	Align AM, I.F. for maximum
10 C	Two turn loop loosely coupled to Wavemagnet		1600 Kc. 400 Cycle Modulated	1600 Kc.	C35F	Set oscillator to dial scale
11 C	Two turn loop loosely coupled to Wavemagnet		1400 Kc. 400 Cycle Modulated	1400 Kc.	C35D, C35B	Align detector and antenna stages.

For A, B, C See Page 14

OPERATION	CONNECT GENERATOR TO	DUMMY ANTENNA	INPUT SIGNAL FREQUENCY	SET DIAL TO	ADJUST IRON CORES	PURPOSE
1 B	Pin #1 6AU6 2nd limiter grid	.001 mfd	10.7 Mc. 400 Kc. Deviation	88 Mc.	L11	Adjust primary and secondary of ratio detector for maximum amplitude & symmetry as shown in Scope Pattern "B"
2 B	Pin #1 6AU6 2nd limiter grid	.001 mfd	10.7 Mc. 400 Kc. Deviation	88 Mc.	L13	
3 A	Pin #2 6BN6 1st limiter grid	.001 mfd	10.7 Mc. 400 Kc. Deviation	88 Mc.	L10	Align I.F. transformers for maximum output & symmetry This pattern is not necessarily identical to the overall Scope Pattern "A"
4 A	Pin #2 6EQ7 2nd I.F. grid	.001 mfd	10.7 Mc. 400 Kc. Deviation	88 Mc.	L8, L9	
5 A	Pin #1 6BA6 1st I.F. grid	.001 mfd	10.7 Mc. 400 Kc. Deviation	88 Mc.	L6, L7	
6 A	Test Point "F"	.001 mfd	10.7 Mc. 400 Kc. Deviation	88 Mc.	L4, L5	Align I.F. transformers for maximum output & symmetry as indicated in Scope Pattern "A"
7 A		.001 mfd	10.7 Mc. 400 Kc. Deviation	88 Mc.	Readjust L4, L5, L6, L7, L8, L9, L10	
8 A	FM antenna post (remove antenna)	300 ohms	98 Mc. 400 Kc. Deviation	98 Mc.	L3	Set oscillator to dial scale
9 A	FM antenna post (remove antenna)	300 ohms	98 Mc. 400 Kc. Deviation	98 Mc.	L2 & L1	Align detector and antenna stages for maximum.
10 C	Pin #1 6BE6 converter grid	.05	455 Kc. 400 Cycle Modulated	600 Kc.	L21, L22, L14, L15, L16, L17	Align AM I.F. for maximum
11 C	Two turn loop loosely coupled to wavemagnet		1600 Kc. 400 Cycle Modulated	1600 Kc.	C38F	Set oscillator to dial scale
12 C	Two turn loop loosely coupled to wavemagnet		1400 Kc. 400 Cycle Modulated	1[illegible]0 Kc.	C38D, C38B	Align detector and antenna stages

For A, B, C See Page 14

OPERATION	CONNECT GENERATOR TO	DUMMY ANTENNA	INPUT SIGNAL FREQUENCY	SET DIAL TO	ADJUST IRON CORES	PURPOSE
1 B	Pin #1 12AU6 Limiter Grid	.001 mfd	10.7 Mc. 400 Kc. Deviation	88 Mc.	L20	Adjust primary and secondary of ratio detector for maximum amplitude and symmetry as shown in Scope Pattern "B"
2 B	Pin #1 12AU6 Limiter Grid	.001 mfd	10.7 Mc. 400Kc. Deviation	88 Mc.	L22	
3 A	Pin #1 12BA6 2nd I.F. Grid	.001 mfd	10.7 Mc. 400 Kc. Deviation	88 Mc.	L16, L17	Align I.F. transformers for maximum output and symmetry; this pattern is not necessarily identical to the over all scope Pattern "A"
4 A	Pin #1 12BA6 1st I.F. Grid	.001 mfd	10.7 Mc. 400 Kc. Deviation	88 Mc.	L12, L13	
5 A	Test Point "F"	.001 mfd	10.7 Mc. 400 Kc. Deviation	88 Mc.	L4, L5	Align I.F. transformers for maximum out & symmetry as indicated in Scope Pattern "A"
6 A		.001 mfd	10.7 Mc. 400 Kc.	88 Mc.	Readjust L4, L5, L12, L13, L16, L17	
7 A	FM Antenna post (remove antenna)	300 ohms	98 Mc. 400 Kc. Deviation	98 Mc.	L3	Set Oscillator to dial scale
8 A	FM Antenna post (remove antenna)	300 ohms	98 Mc. 400 Kc. Deviation	98 Mc.	L2 & L1	Align detector and antenna stages for maximum
9 C	Pin #1 12BE6 Converter Grid	.05	455 Kc. 400 Cycle Modulated	600 Kc.	L10, L11, L14 L15, L18, L19	Align AM, I.F. for maximum
10 C	Two turn loop loosely coupled to Wavemagnet		1600 Kc. 400 Cycle Modulated	1600 Kc.	C24F	Set oscillator to dial scale
11 C	Two turn loop loosely coupled to Wavemagnet		1400 Kc. 400 Cycle Modulated	1400 Kc.	C24D, C24B	Align detector and antenna stages.

For A, B, C See Page 14

TERMINAL END VIEW OF CARTRIDGE

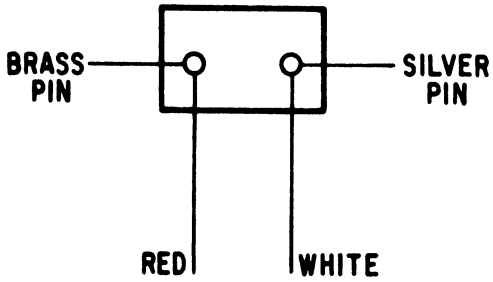

142 - 95 - 125 CARTRIDGE CONNECTIONS

TERMINAL VIEW OF CARTRIDGE

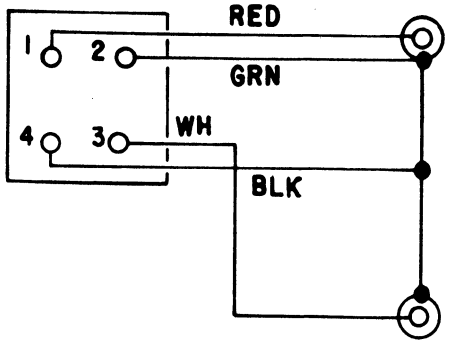

142—113 CARTRIDGE CONNECTIONS

TERMINAL VIEW OF CARTRIDGE

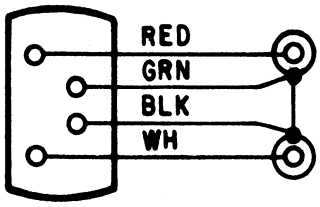

142 - 124 CARTRIDGE CONNECTIONS

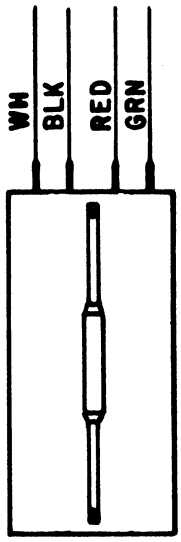

BOTTOM VIEW OF CARTRIDGE

142–137, 142, & 143 CARTRIDGE CONNECTIONS

MULTIPLEX ALIGNMENT PROCEDURE

Using the Zenith FM multiplex signal generator, the multiplex portion of Zenith or any FM multiplex receiver can be aligned, but first before any attempt is made to do this it is necessary that the technician be certain that the RF, IF, and ratio detector alignment is correct, and that the receiver operates normally on monaural signals.

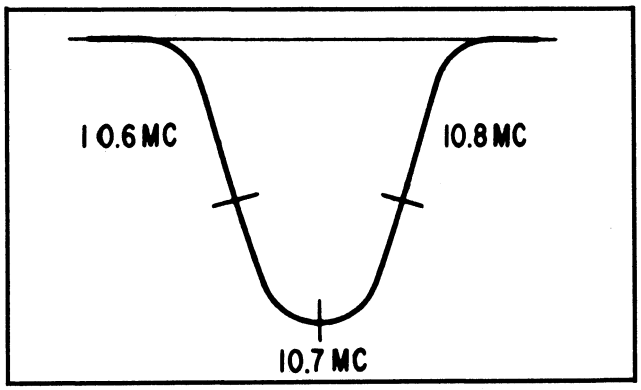

IF CURVE

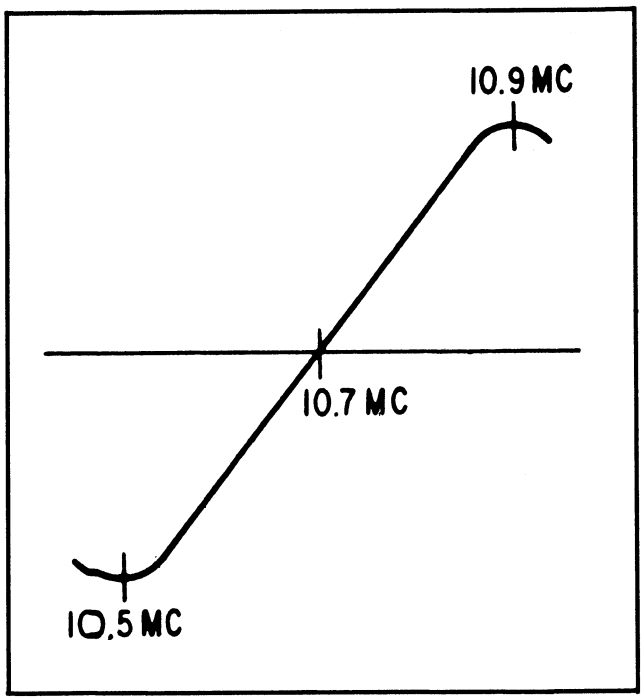

RATIO DETECTOR CURVE

Because of the wide band pass required in the multiplex FM receiver, it is desirable to use an FM signal generator having a deviation of at least 200 KC with a sweep rate of 60 cycles, as well as an oscilloscope. During the IF and ratio detector alignment it is not only necessary to obtain maximum gain, but also extremely important to maintain symmetry.

To help achieve this IF curve symmetry 10.6 and 10.8 megacycle markers must be symmetrically positioned and the 10.7 megacycle marker must be at the center of the curve. When aligning the ratio detector 10.5 and 10.9 megacycle markers are desirable to achieve S curve symmetry. The pattern illustrating marker use to obtain S curve symmetry indicates it is most necessary to adjust for maximum gain and at the same time maintain linearity and symmetry. 10.7 megacycles must be on the curve at the reference line. 10.5 megacycles and 10.9 megacycles must be at the lower and upper turn of the S curve respectively. Only when the I.F. and ratio detector circuitry have been aligned in accordance with these specifications should the technician proceed to align the multiplex portion of the receiver.

Preliminary Procedures

Before using the Zenith FM multiplex signal generator, it is recommended that it be connected to the power source and turned on giving it a 10 to 20 minute warmup period. This will allow ample time for the RF, audio, and 19KC oscillators to stabilize.

The following procedure is only necessary when the generator has been received from the factory, or has been subjected to a great deal of handling or transportation vibration. Although the 19KC pilot generator oscillator is extremely stable, there is always the possibility that it could shift from its precisely assigned frequency. As a result, we have a very simple method to check the 19KC pilot frequency using an FM multiplex receiver and an FM multiplex station as a frequency standard. Proceed as follows:

1. Tune your FM multiplex receiver to an FM multiplex station and when the pilot indicator lights up, this indicates the 19KC pilot amplifier is functioning and the doubler and ringing circuit will be creating a 38KC sine wave. Since this 38KC sine wave is developed from information obtained from the transmitter, it must be on frequency and can be used as a reference standard. With the enclosed cable, connect to the plate terminal of the 38KC subcarrier amplifier (380 volts PP) and connect the other end of this cable to the 38KC input terminal on the FM multiplex generator.
2. Set the pilot carrier amplitude control to 10%, plug in a pair of high impedance earphones into the Beat Frequency Output Jack on the generator, then adjust the pilot carrier frequency with an IF alignment wrench. Watch the 38KC neon zero beat indicator, and listen to the phones. When the zero beat is obtained between the two 38KC signals, the standard from the receiver and the 38KC from the multiplex generator, the 19KC oscillator in the generator will be on the exact frequency. After this zero beat adjustment has been made, disconnect all cables.

This generator provides composite multiplex output as well as an RF signal, FM modulated by the composite multiplex signal. The composite signal is very useful since it is an excellent tool that can be used in trouble-shooting and signal tracing the multiplex portion of a receiver. We do not recommend that multiplex alignment be made using only the composite signal injected at the output terminal of the ratio detector tertiary winding. Since there is always a possibility of some phase shift occurring in the RF, IF, or ratio detector circuits, multiplex alignment made by signal injection at the ratio detector would not be as correct for each receiver as it would be if the composite signal FM modulated an RF carrier and this signal were injected into the FM antenna terminals. With the signal injected in this manner, the multiplex alignment would be the best that could possibly be achieved, and separation would be the maximum obtainable for this specific receiver.

The RF carrier in this generator is variable from 88 to 108 MC. The RF signal should be injected at a point in the FM band where no other signal is present. If at all possible this should be at a frequency near the middle of the FM band. Tune the FM receiver to this point and adjust the RF frequency adjusting slug on the generator to this same frequency. The AGC voltage developed in the receiver should be approximately 5 to 6 volts. AGC voltage substantially less than this will indicate the RF frequency adjusting slug is tuned to an image.

67 KC Trap Adjustment

1. Connect the stereo generator RF leads to the G and F FM antenna terminals and set the pilot carrier control to zero.
2. Move L + R and L - R switches to OFF position.
3. Move 67KC generator switch from OFF position up to 67KC.
4. Connect the V.T.V.M. (AC scale) and/or scope to either C.T. or either end of multiplex detector coil and chassis ground.
5. Adjust 67KC trap for minimum output.
6. Move 67KC generator switch to OFF position.

19 KC Subcarrier amplifier adjustment

1. Turn generator pilot carrier amplitude control to 10% position.
2. Connect the V.T.V.M. (DC scale) and/or scope to the junction of the two frequency doubling diodes and chassis.
3. Adjust the mute control to maximum bias so that the 19KC pilot carrier amplifier is cut off. (It may be necessary to momentarily switch receiver to AM position to disrupt the 19KC signal so the stereo indicator will turn off.) After the pilot carrier is cut off, it will be necessary to rotate the receiver mute control towards minimum bias so there will be sufficient signal for alignment in Step #4. Then as the 19KC signal increases while making the adjustment in Step #4, the mute control must simultaneously be rotated towards maximum bias so the stereo indicator will not fire. (If it does fire, it may be necessary to momentarily switch receiver to AM to extinguish it).
4. Adjust the 19KC and frequency doubler coils for maximum DC output from the diodes.
5. Now slowly rotate the mute control towards minimum bias and stop when the 19KC stereo indicator fires (lights up).
6. Place the V.T.V.M. (AC scale) and/or scope at either end of the secondary of the multiplex detector coil and chassis.
7. Adjust the multiplex detector coil for maximum 38KC output.

Separation Adjustments

1. Move L - R generator switch from OFF position up to L - R position.
2. Connect a V.T.V.M. (AC scale) and/or scope to the L audio output after the 38KC filter and chassis.
3. Adjust doubler coil for maximum voltage at L output. This will be a very critical adjustment. There may be two peaks, in which case the one closest to the adjustment obtained in 19KC SUBCARRIER ADJUSTMENT, procedure #4, will be the correct one.
4. Now also turn on the L + R signal and check R output after the 38KC filter. The magnitude of this signal should be much less than the signal at the L output. The signal voltage at the L audio output should be approximately 10 times greater than the voltage at the R output.
5. On receivers having a separation control, adjust it for minimum signal at R output.

Mute Level Adjustment

1. Turn generator pilot carrier amplitude control to 5% and rotate the mute control to maximum bias position. Then momentarily switch to AM to disrupt the 19KC signal so the stereo indicator will turn off.
2. Now slowly rotate the mute control in the opposite direction and stop the instant the stereo indicator lights up.

TROUBLE-SHOOTING

Should a problem arise in aligning the FM multiplex portion of the receiver and the technician does not know whether the difficulty lies in the RF, IF, limiter and ratio detector portions of the receiver, or whether the difficulty lies in the multiplex portion, the multiplex generator can be used as an excellent signal tracing device to determine if the multiplex section of the receiver is functioning properly. The composite output of the multiplex generator can be injected at P, the output of the ratio detector. To reduce possible extraneous signals coming through the ratio detector, connect the screen and plate of the limiter together with a jumper lead. The wave forms and their magnitudes may vary slightly from chassis to chassis, however, they are quite indictive of what will be seen when signal tracing the multiplex circuitry.

67 KC Signal Tracing

1. Set the 19KC pilot carrier control to zero.
2. Move L + R and L - R switches to OFF position.
3. Move the 67KC generator switch from OFF position up to 67KC. Sequentially connect an oscilloscope to points P, Q, T, and S. A 67KC sine wave should be seen at P. At Q a 67KC signal should be seen but it will be much smaller in magnitude that at P, indicating that the trap has attenuated the signal. The voltage relationship should be approximately 20 to 1. 67KC can also be observed at points T and S. If the relationship of all wave forms is correct, the 67KC circuitry has now been thoroughly checked and is functioning correctly.

19 KC Signal Tracing

1. Move the 67KC generator switch to OFF position.
2. Turn the generator 19KC pilot carrier amplitude control to 10% position.

Sequentially connect your scope to points Q, L, M, and N. At all points you should see the 19KC sine wave. At the plate, point N, of the 19KC pilot amplifier the 19KC sine wave should be seen in much greater magnitude than at M.

Doubler and Subcarrier Signal Tracing

To determine if the doubler is functioning, place your scope at point O and you will see 38KC DC pulses. Placing the scope at W you will see 38KC clipped DC pulses. Placing the scope at the plate, R, of the subcarrier amplifier, you should see a 38KC sine wave which will indicate that the subcarrier amplifier and associated ringing circuitry is functioning properly.

Multiplex Detector Signal Tracing

1. Leave the 19KC amplitude control at 10%.
2. Move the L-R generator switch from OFF position to L -R position. You should see equal amplitude 1000 cycle sine waves at both points V and U.
3. Move the L+R switch from OFF up to L+R and look at the L audio output, point U, and measure the magnitude of the 1000 cycle sine wave. At point V you will also see a 1000 cycle sine wave and if the multiplex detector and preceeding circuitry are aligned properly, the magnitude of the wave form at U should be greater than at V.

If all the waves are similar in form and magnitude to those indicated, then it can be assumed that the multiplex portion of the receiver is functioning properly and the problem lies ahead of this in the FM receiver. If any of the wave forms are missing at a latter point but are apparent at a previous point, then something is amiss in the circuitry between the two test points.

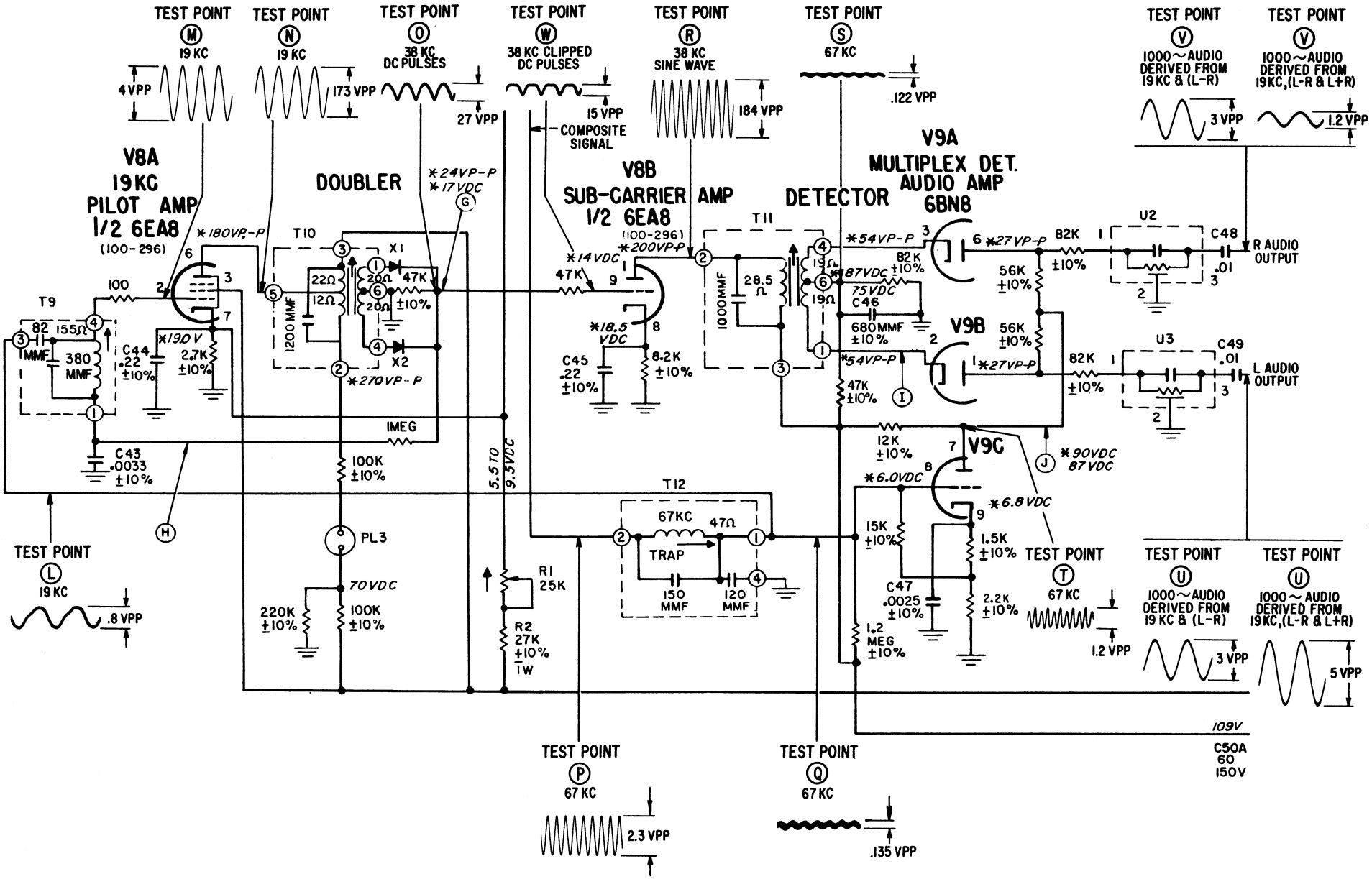

SIGNAL TRACING MULTIPLEX CIRCUITS

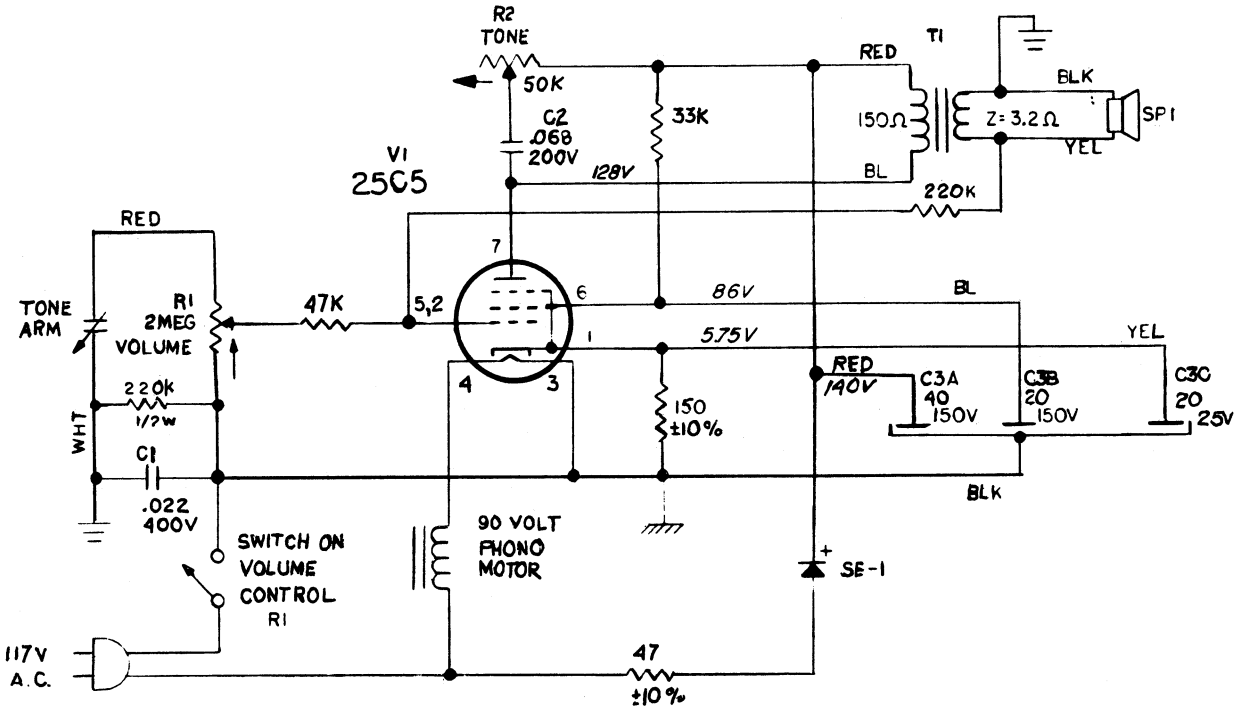

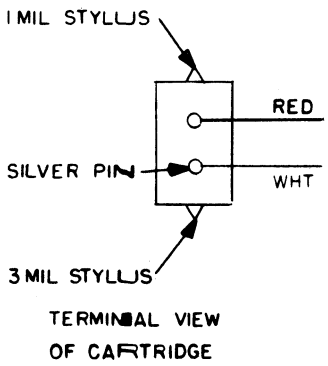

NOTES:
ARROW ON CONTROLS INDICATES CLOCKWISE ROTATION.
ALL VOLTAGES MEASURED FROM COMMON RETURN TO POINTS INDICATED WITH AN A.C. - D.C. VACUUM TUBE VOLTMETER.
ALL VOLTAGES ARE D.C. UNLESS OTHERWISE SPECIFIED.
ALL CAPACITOR VALUES IN MICROFARADS UNLESS OTHERWISE SPECIFIED.
ALL RESISTORS ARE ±20% TOLERANCE, 1/2 ATT CARBON UNLESS OTHERWISE SPECIFIED.

DENOTES COMMON RETURN B-

DENOTES CHASSIS

1L20 SCHEMATIC FOR MODEL ZP2

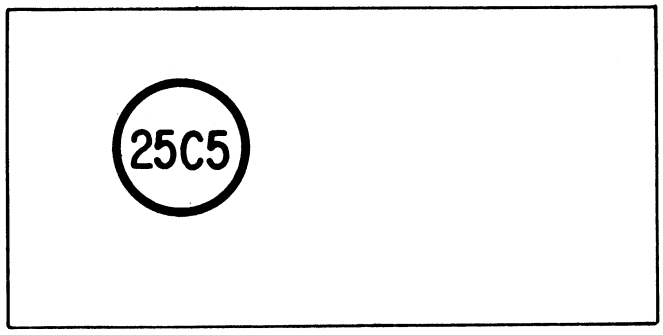

1L20 TUBE LAYOUT FOR MODEL ZP2

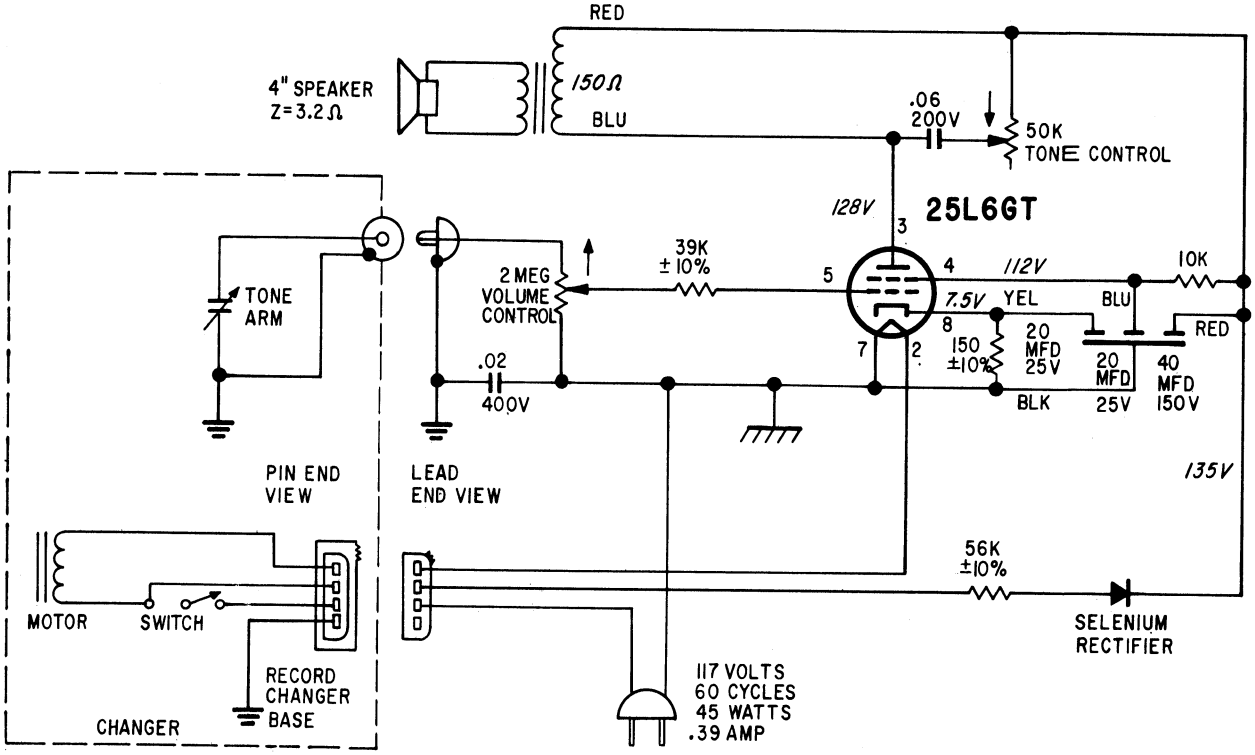

NOTES:

1. ARROW ON CONTROLS INDICATES CLOCKWISE ROTATION.
2. ALL VOLTAGES MEASURED FROM COMMON RETURN TO POINTS INDICATED WITH AN AC-DC VACUUM TUBE VOLTMETER.
3. ALL VOLTAGES ARE DC UNLESS OTHERWISE SPECIFIED.
4. ALL CAPACITOR VALUES IN MICROFARADS UNLESS OTHERWISE SPECIFIED.
5. ALL RESISTORS ARE ±20% TOLERANCE, 1/2 WATT, CARBON UNLESS OTHERWISE SPECIFIED.

DENOTES CHASSIS

DENOTES COMMON RETURN B-

SCHEMATIC FOR MODEL MP10

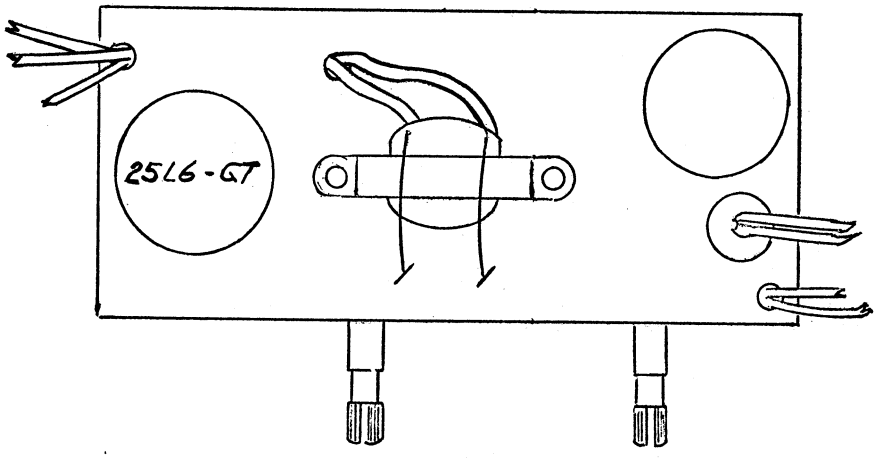

TUBE LAYOUT FOR MP10

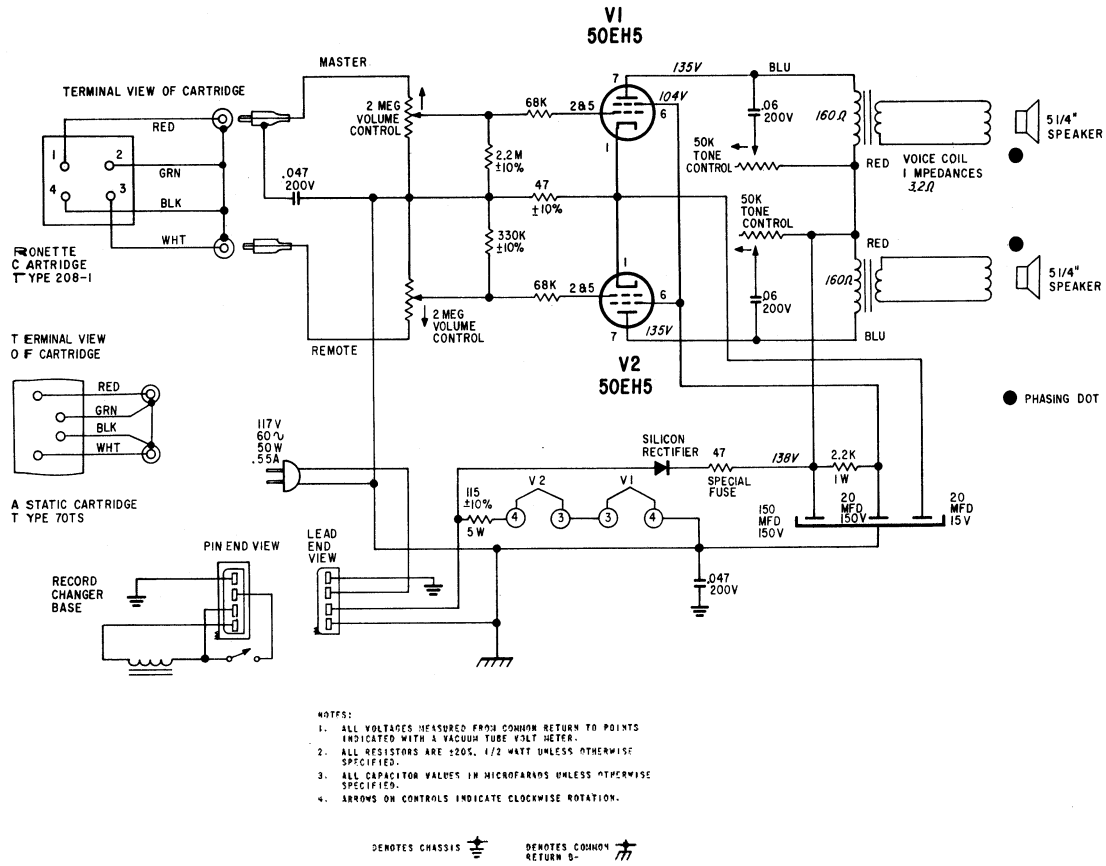

SCHEMATIC FOR MODEL MPS40

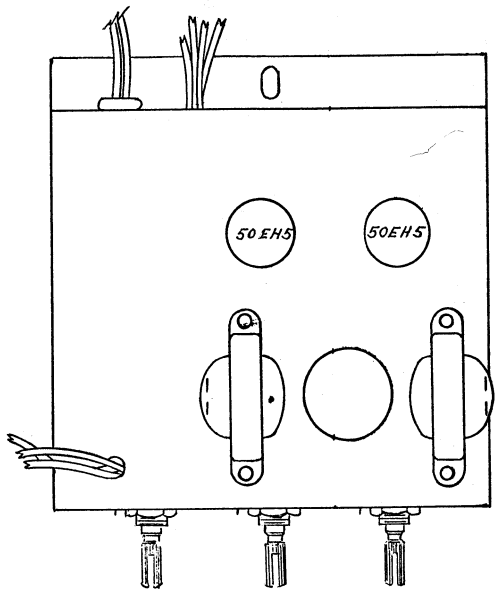

TUBE LAYOUT FOR MODEL MPS40

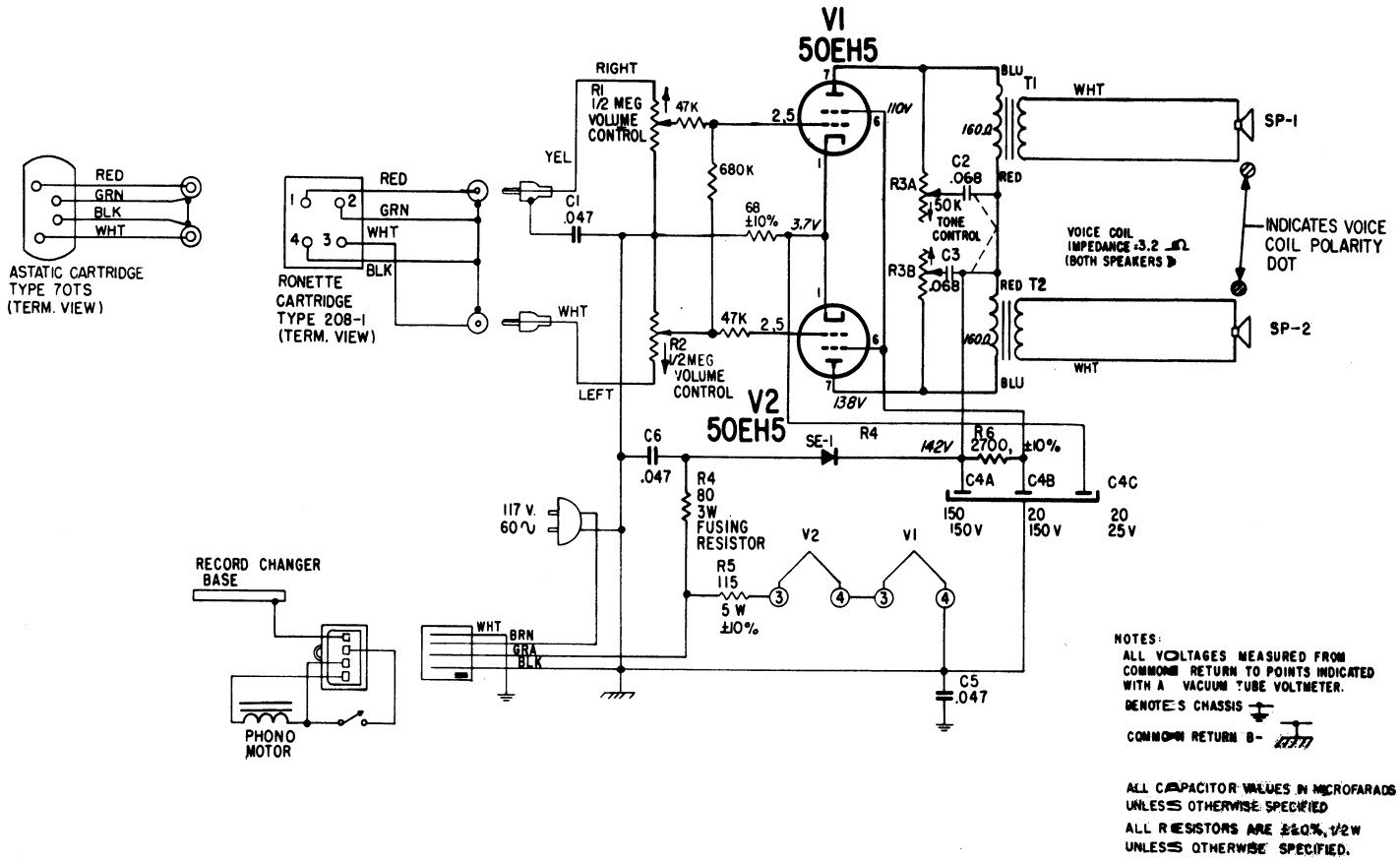

2L20 SCHEMATIC FOR MODEL MPS45

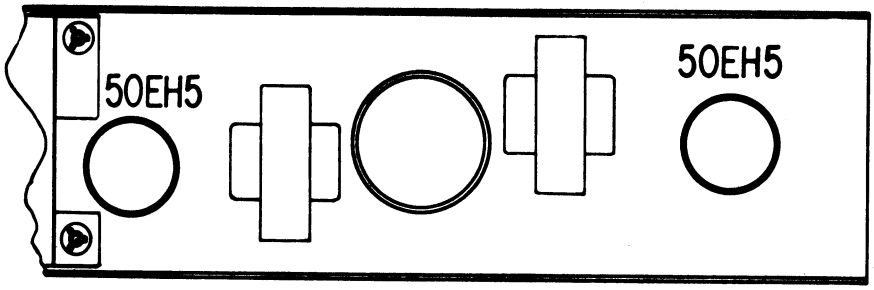

2L20 TUBE LAYOUT FOR MODEL MPS45

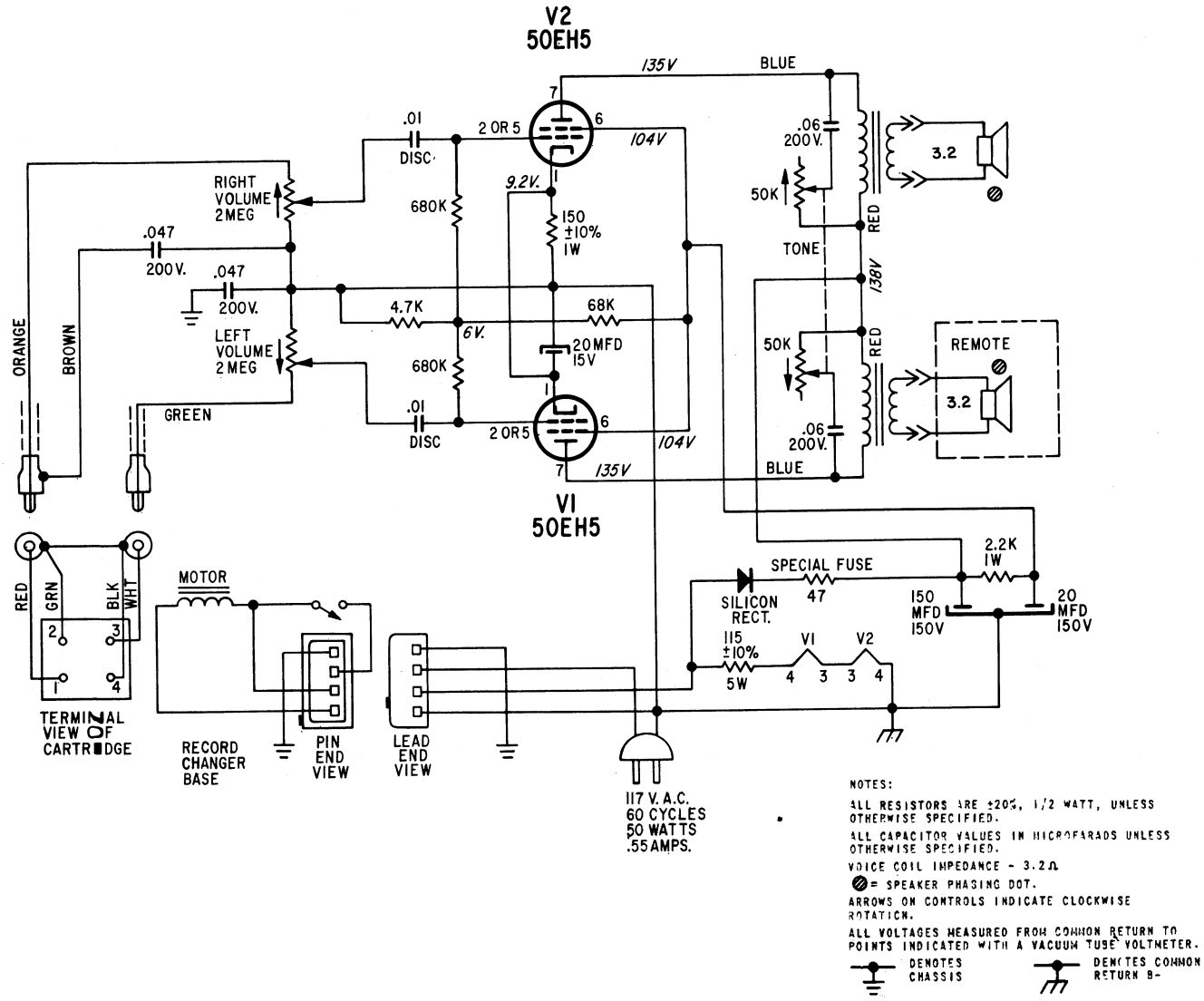

SCHEMATIC FOR MODEL SA49

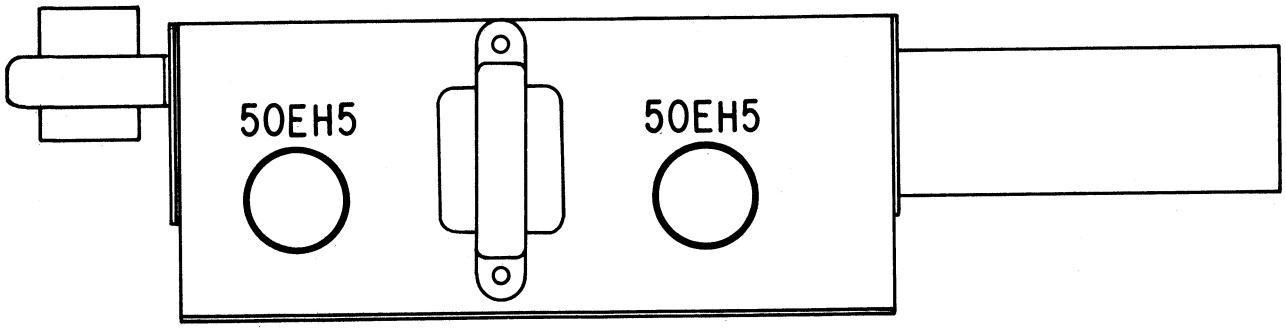

TUBE LAYOUT FOR MODEL SA49

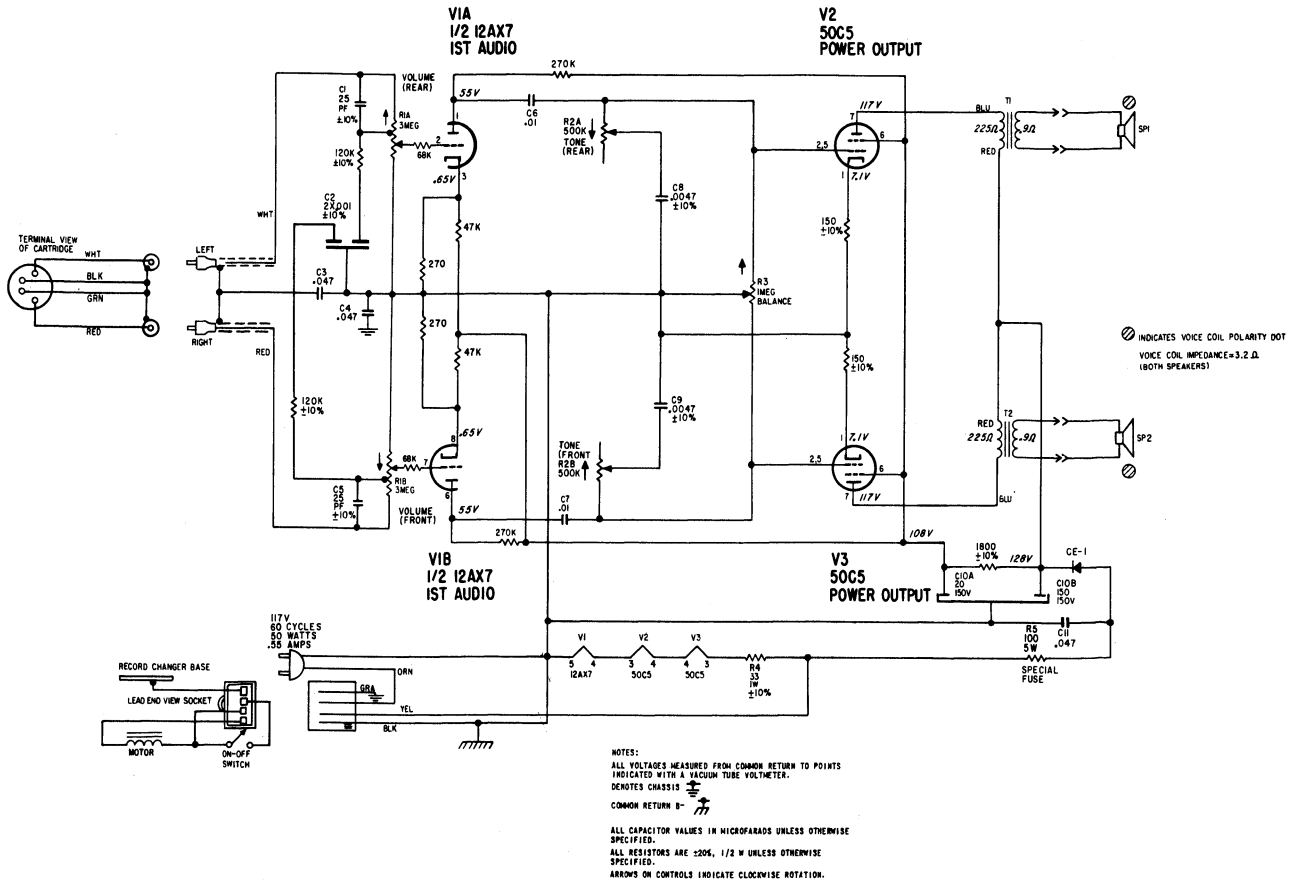

3L03 SCHEMATIC FOR MPS50

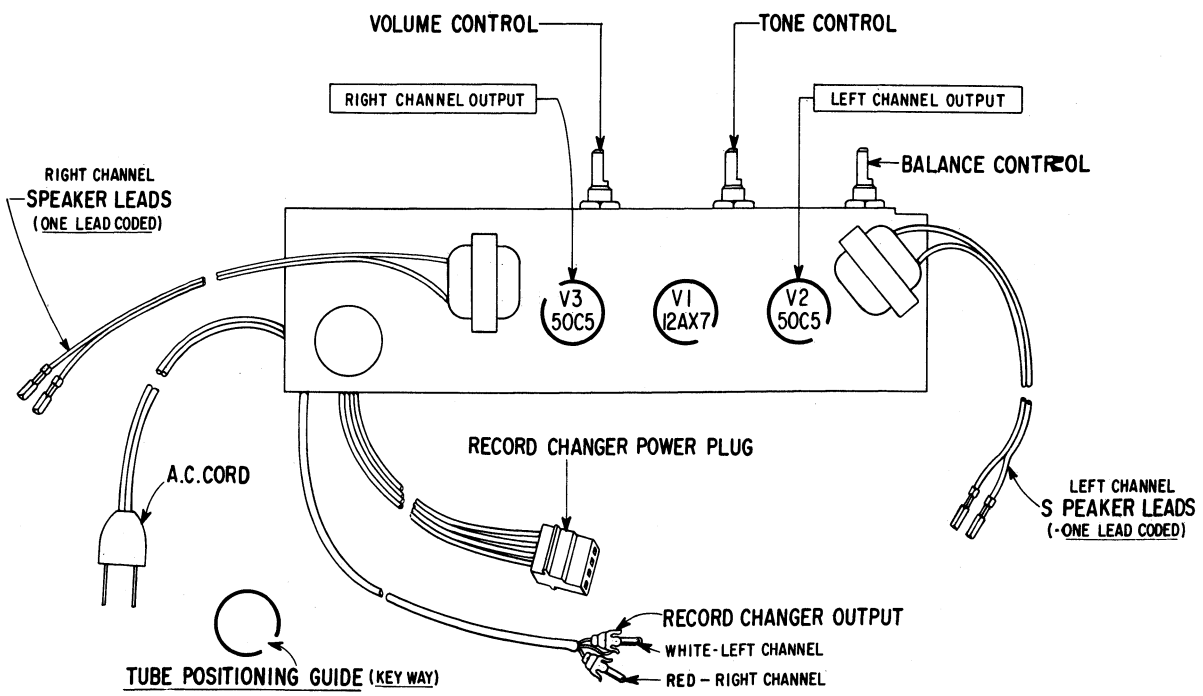

3L03 TUBE LAYOUT FOR MPS50

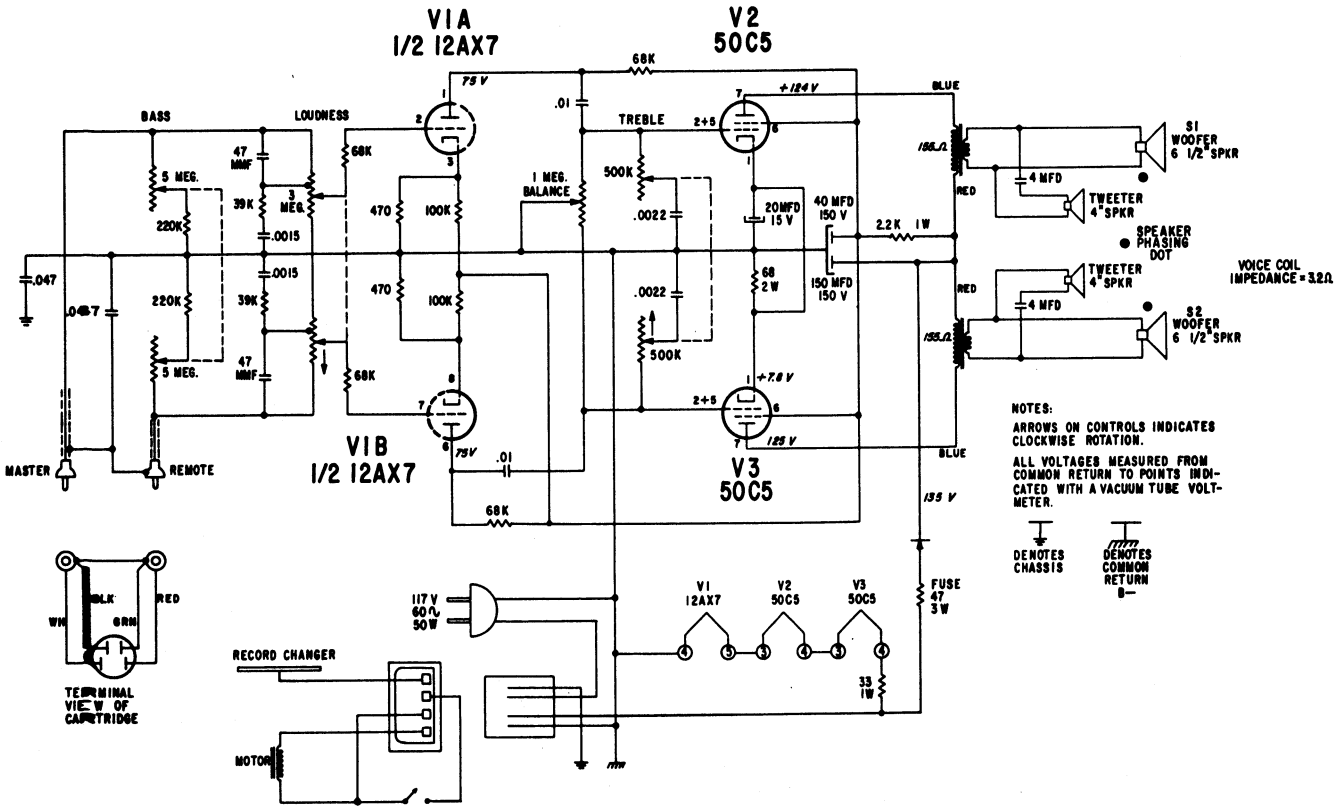

SCHEMATIC FOR LPS70-1

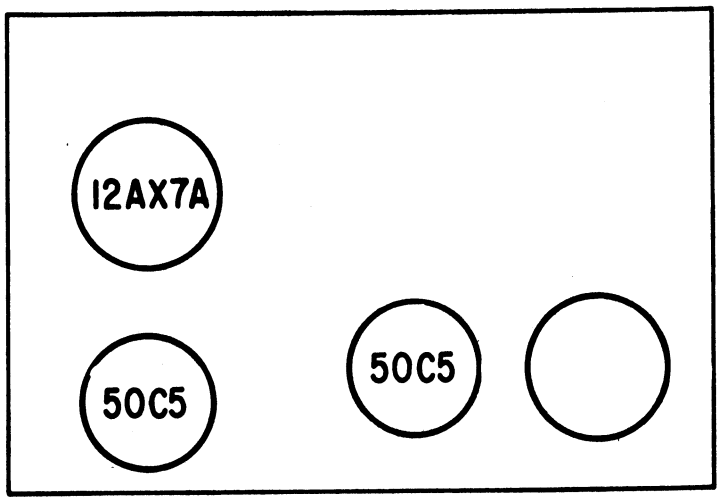

TUBE LAYOUT FOR LPS70-1

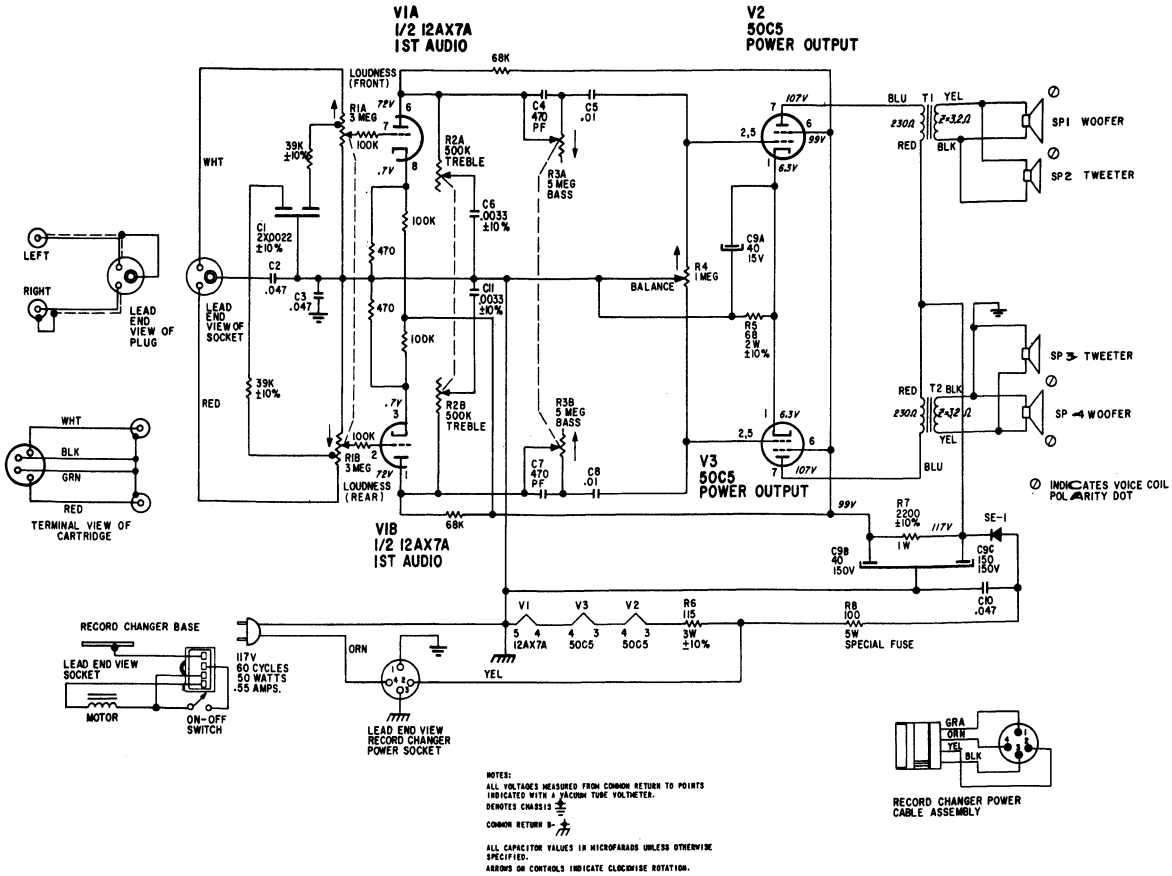

3L05 SCHEMATIC FOR LPS75-1

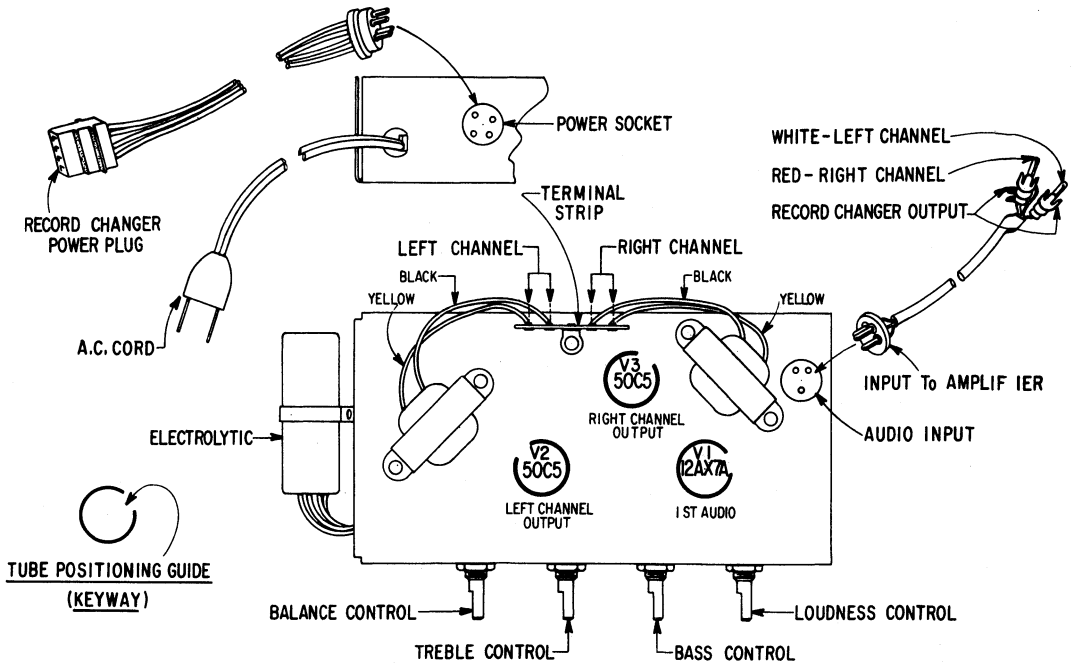

3L05 TUBE LAYOUT FOR LPS75-1

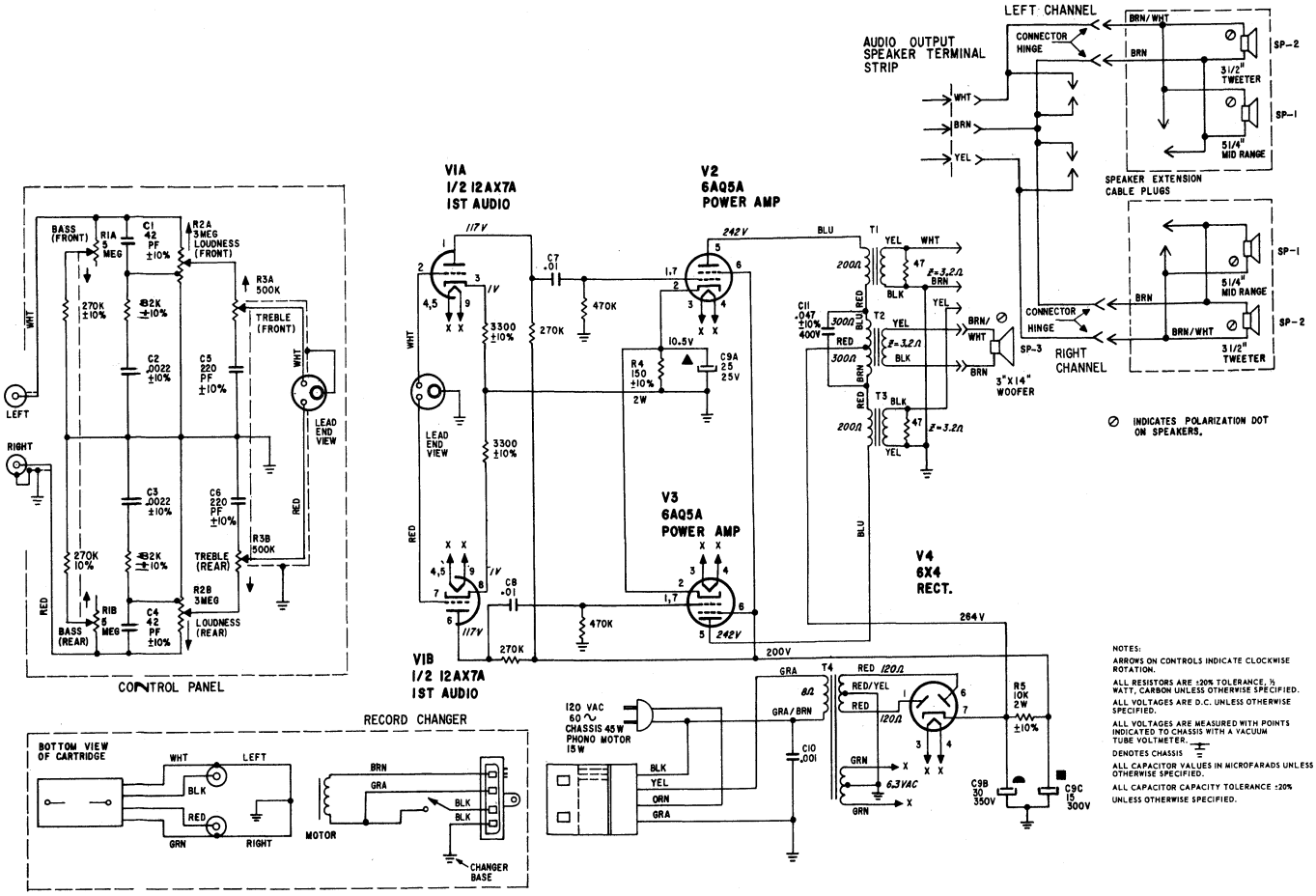

4L24 SCHEMATIC FOR MPS85

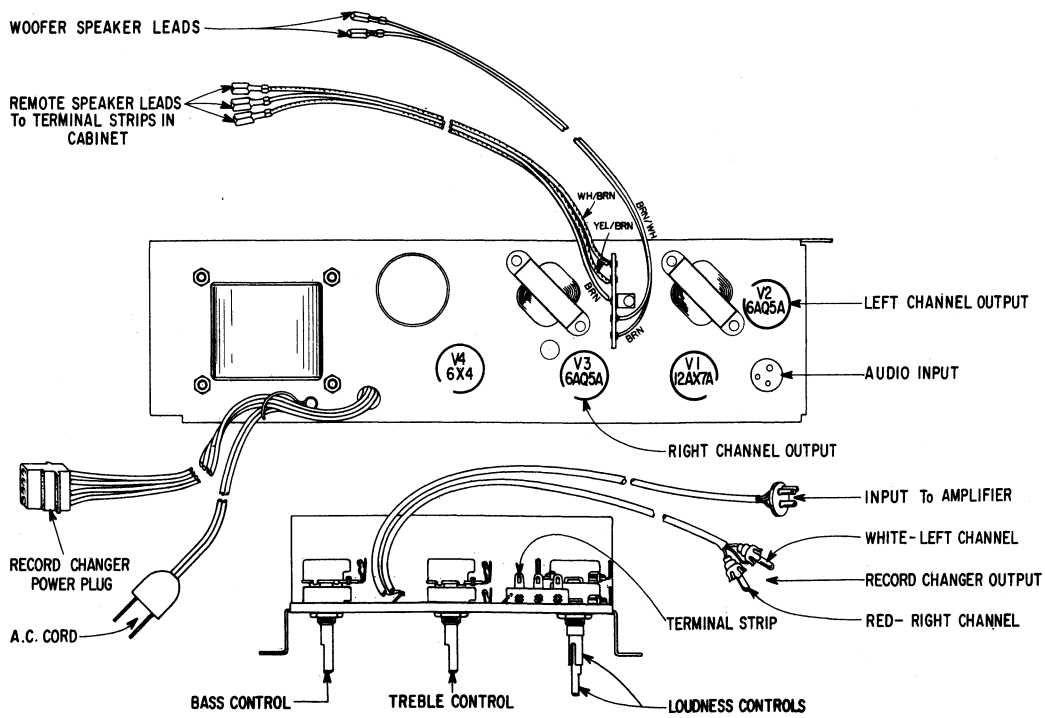

4L24 TUBE LAYOUT FOR MPS85

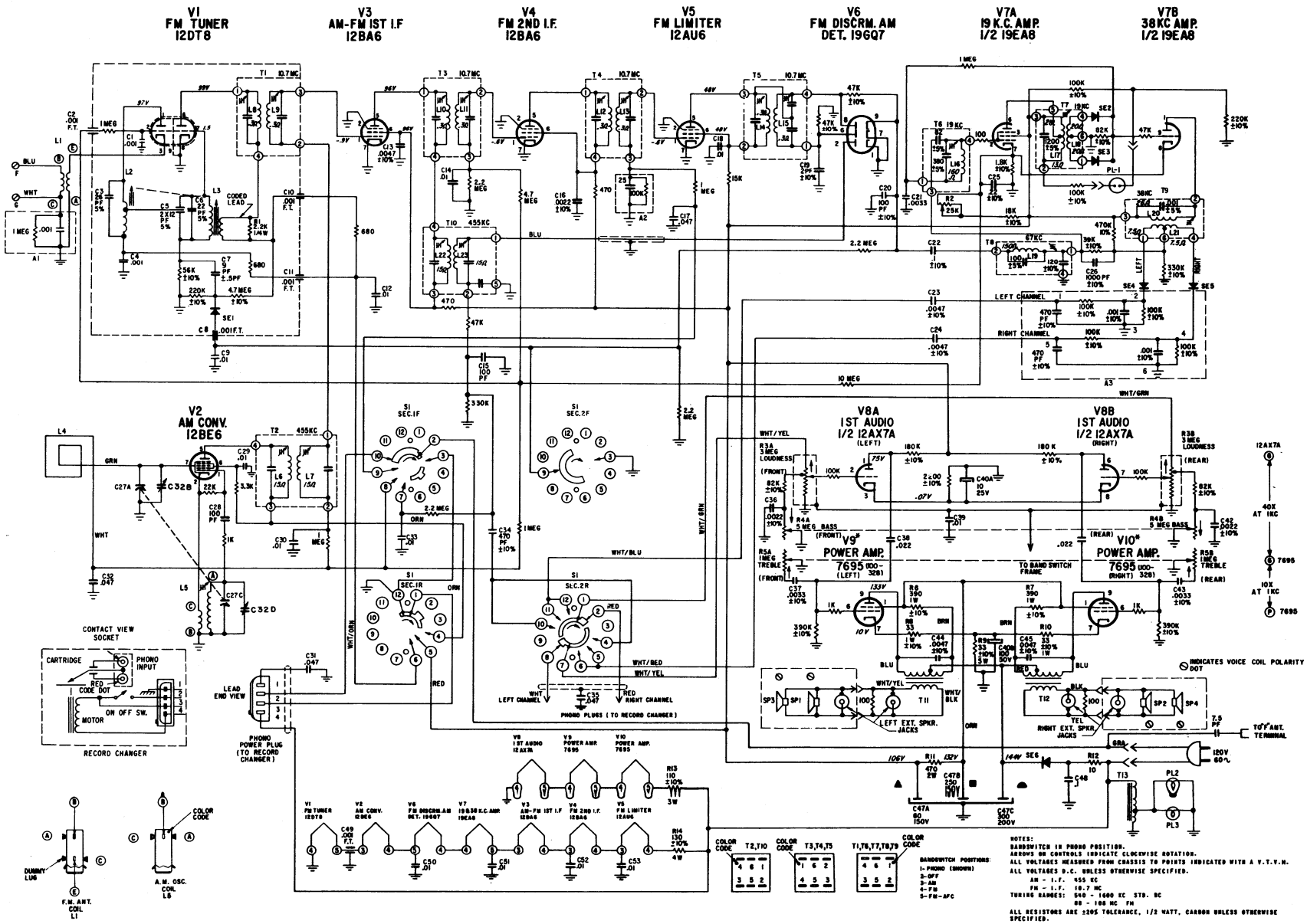

10L02Z SCHEMATIC FOR MODEL LPM95-2

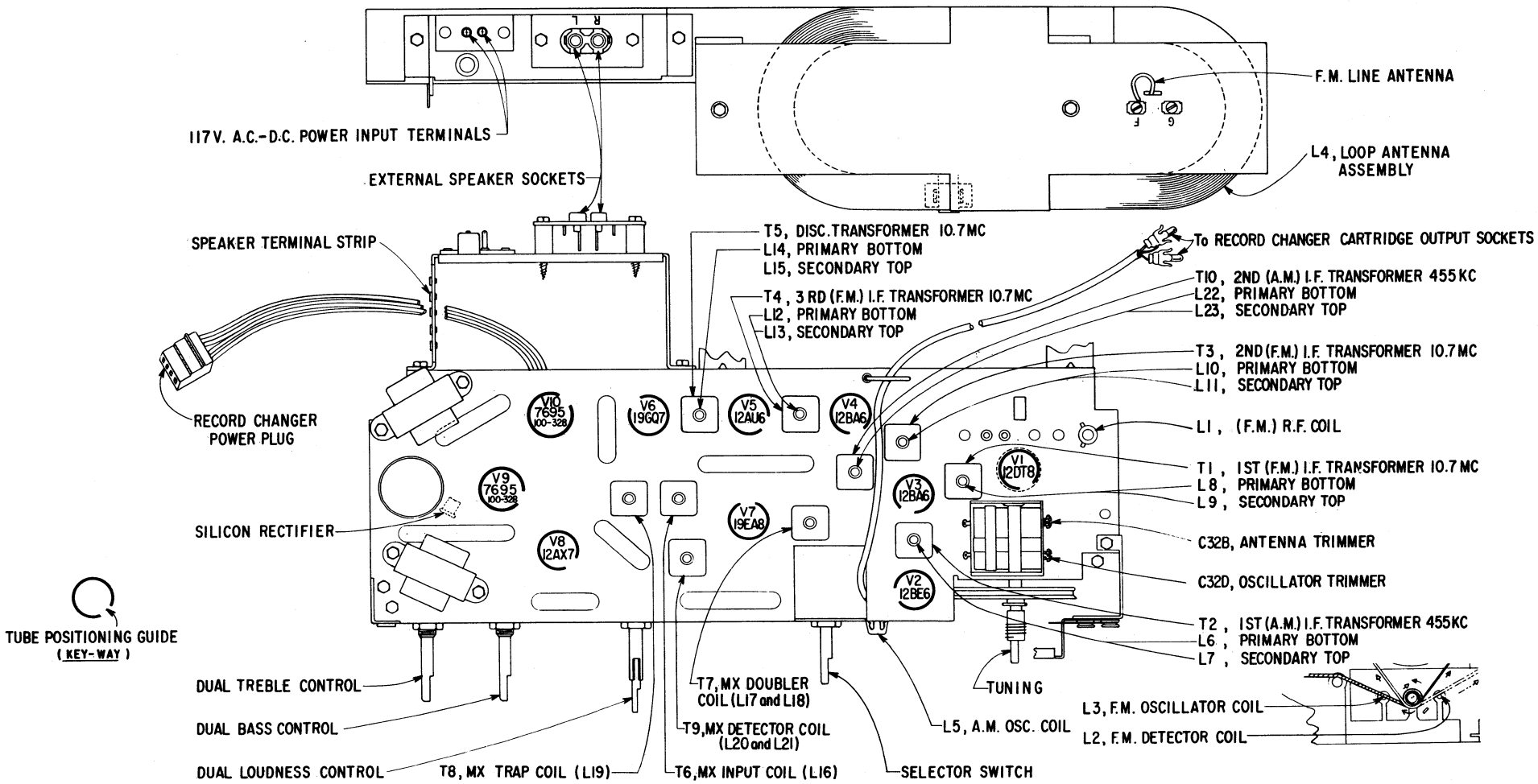

10L02Z TUBE LAYOUT FOR MODEL LPM95-2

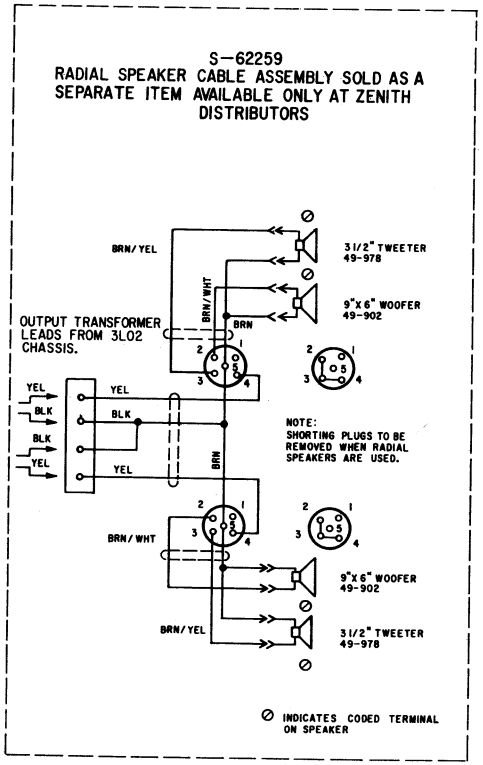

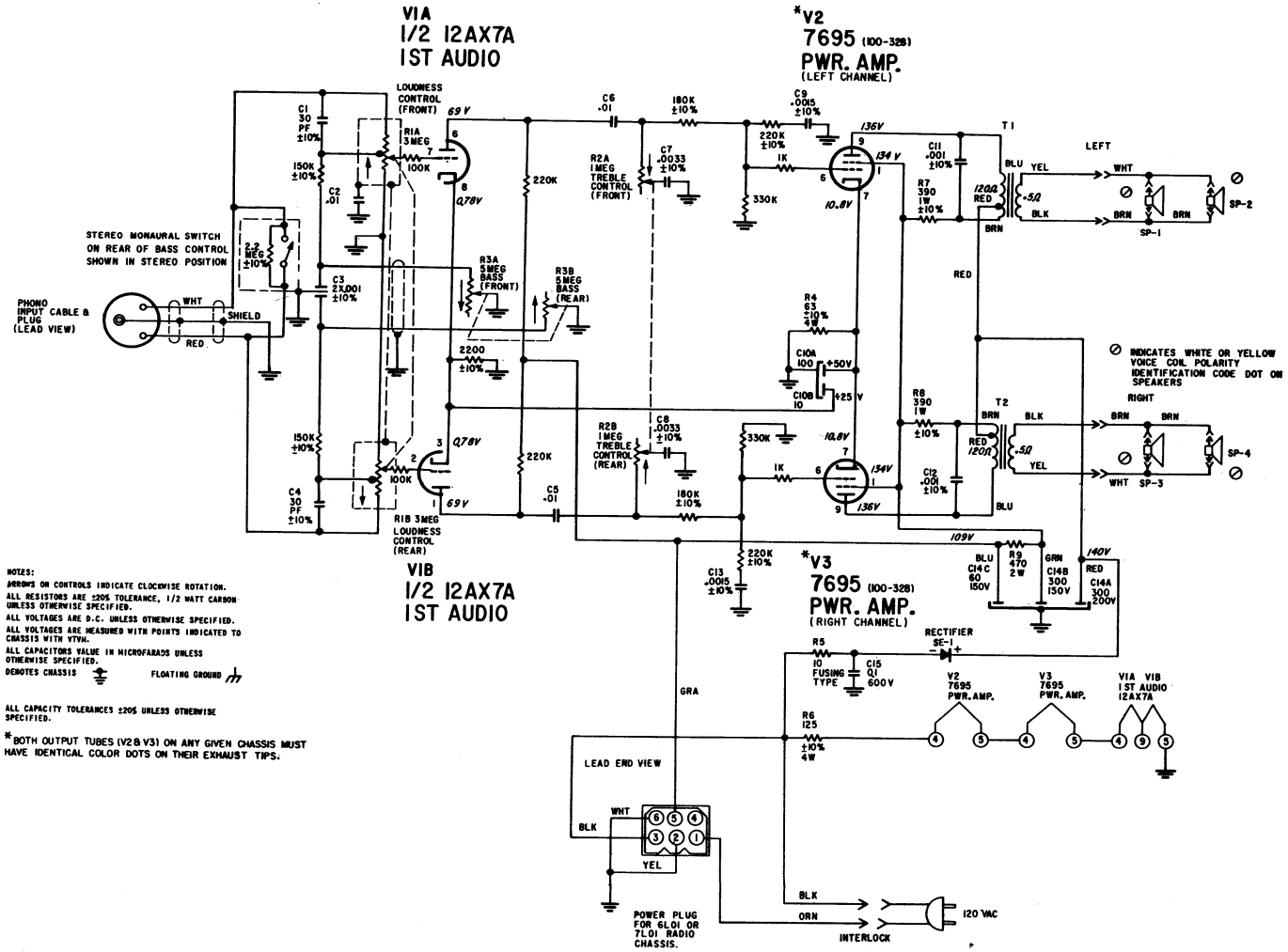

NOTES:
ARROWS ON CONTROLS INDICATE CLOCKWISE ROTATION.
ALL RESISTORS ARE ±20% TOLERANCE, 1/2 WATT CARBON UNLESS OTHERWISE SPECIFIED.
ALL VOLTAGES ARE D.C. UNLESS OTHERWISE SPECIFIED.
ALL VOLTAGES ARE MEASURED WITH POINTS INDICATED TO CHASSIS WITH VTVM.
ALL CAPACITORS VALUE IN MICROFARADS UNLESS OTHERWISE SPECIFIED.
DENOTES CHASSIS ⏚ FLOATING GROUND ⏚
ALL CAPACITY TOLERANCES ±20% UNLESS OTHERWISE SPECIFIED.
*BOTH OUTPUT TUBES (V2 & V3) ON ANY GIVEN CHASSIS MUST HAVE IDENTICAL COLOR DOTS ON THEIR EXHAUST TIPS.

3L02 SCHEMATIC FOR MODELS RM2420, MM2420, MM2601, MM2603, & MM2604

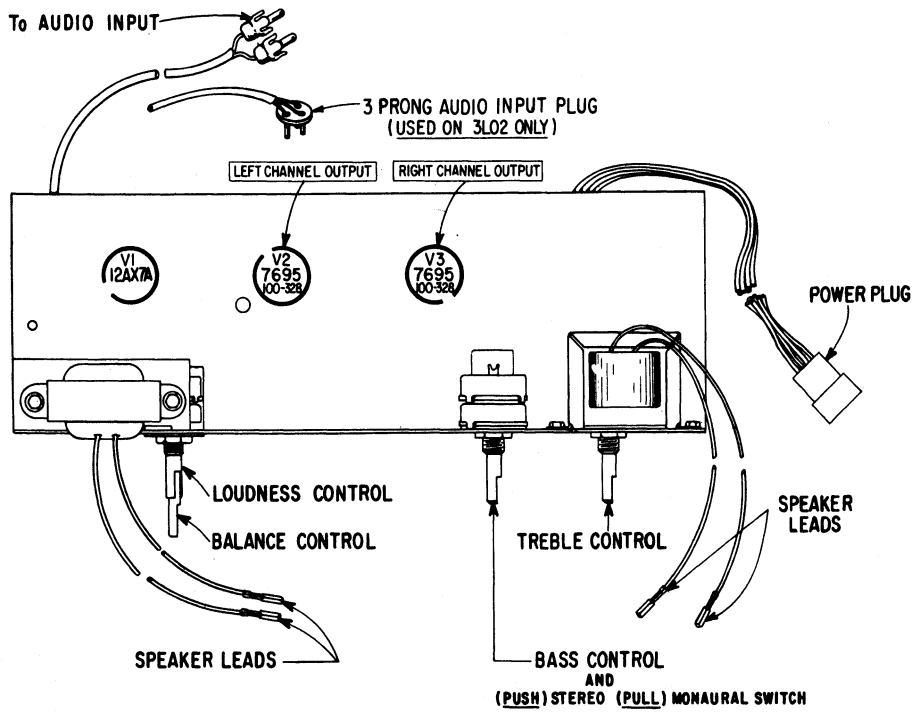

3L02 AND 3L04 TUBE LAYOUT FOR MODELS SM2420, RM2420, MM2420, SM2501, RM2601, MM2601, MM2603, & MM2604

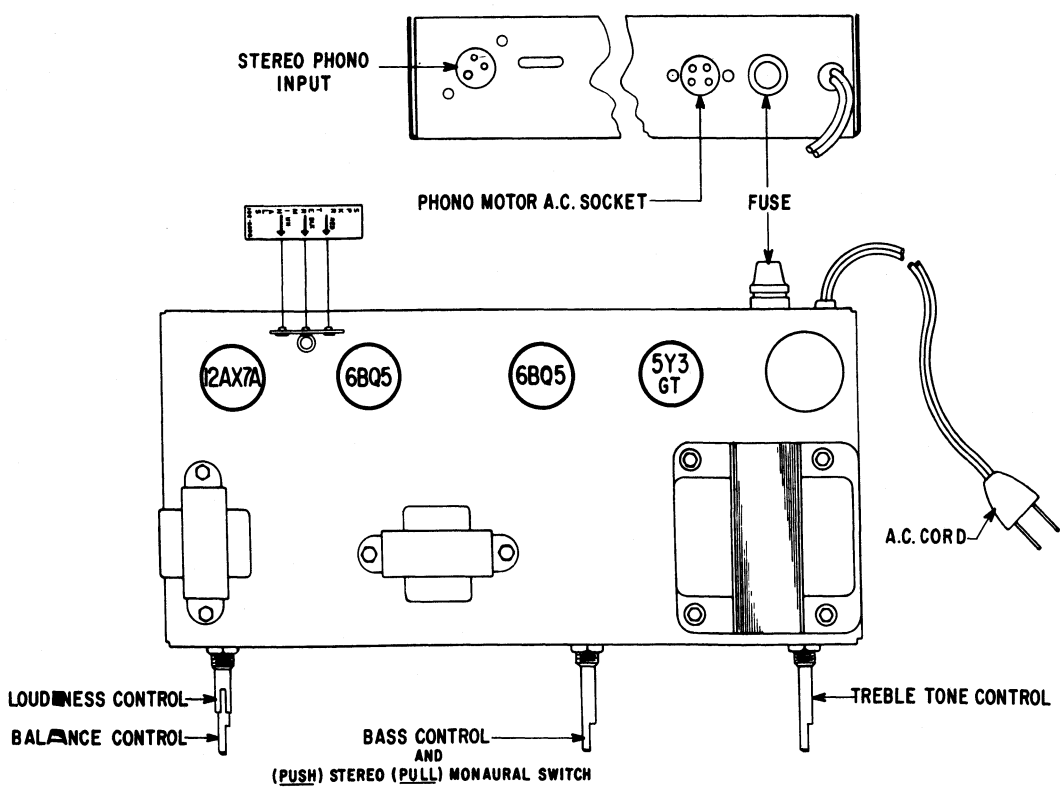

4L22 TUBE LAYOUT FOR MODEL 7100

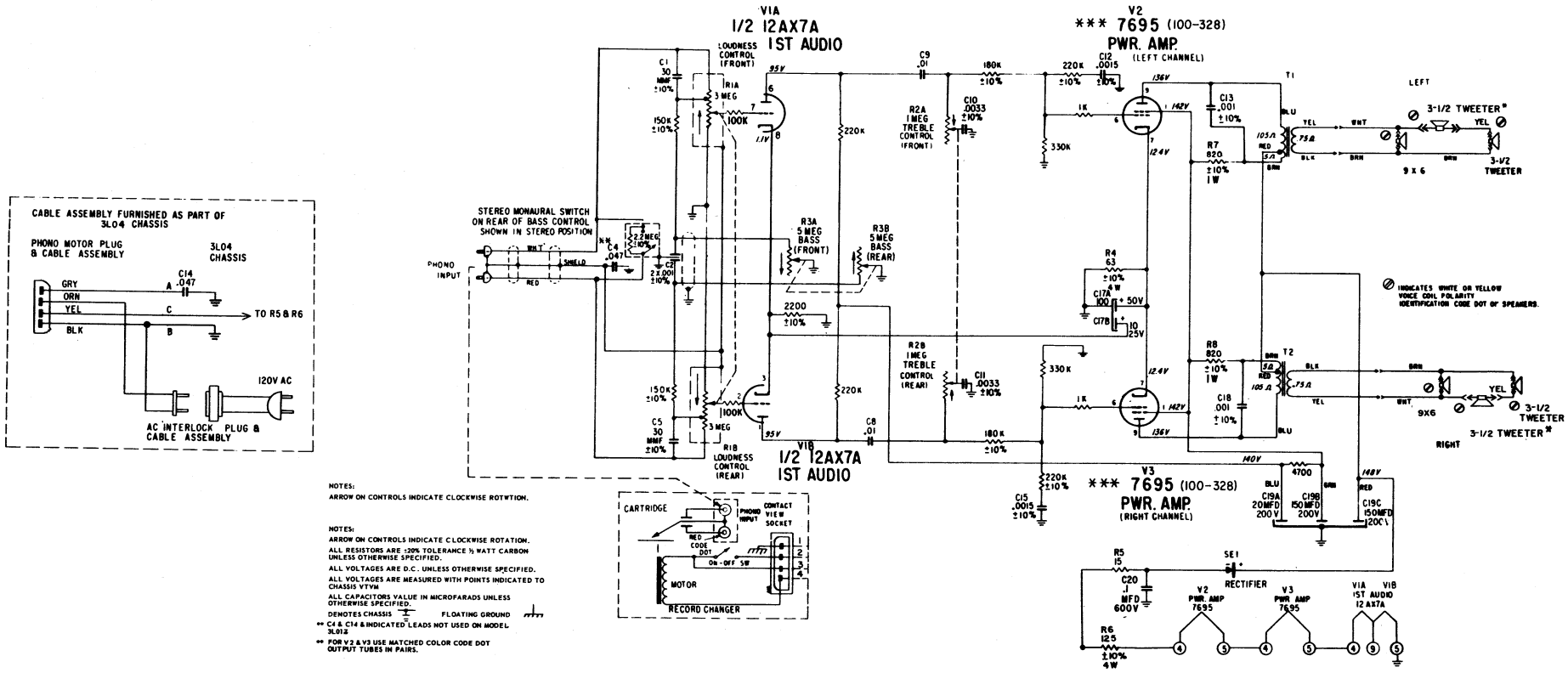

NOTES:
ARROW ON CONTROLS INDICATE CLOCKWISE ROTWTION.

NOTES:
ARROW ON CONTROLS INDICATE CLOCKWISE ROTATION.
ALL RESISTORS ARE ±20% TOLERANCE ½ WATT CARBON UNLESS OTHERWISE SPECIFIED.
ALL VOLTAGES ARE D.C. UNLESS OTHERWISE SPECIFIED.
ALL VOLTAGES ARE MEASURED WITH POINTS INDICATED TO CHASSIS VTVM
ALL CAPACITORS VALUE IN MICROFARADS UNLESS OTHERWISE SPECIFIED.
DENOTES CHASSIS FLOATING GROUND
** C4 & C14 & INDICATED LEADS NOT USED ON MODEL 3L012
** FOR V2 & V3 USE MATCHED COLOR CODE DOT OUTPUT TUBES IN PAIRS.

3L04 SCHEMATIC FOR MODELS SM2420 & SM2501

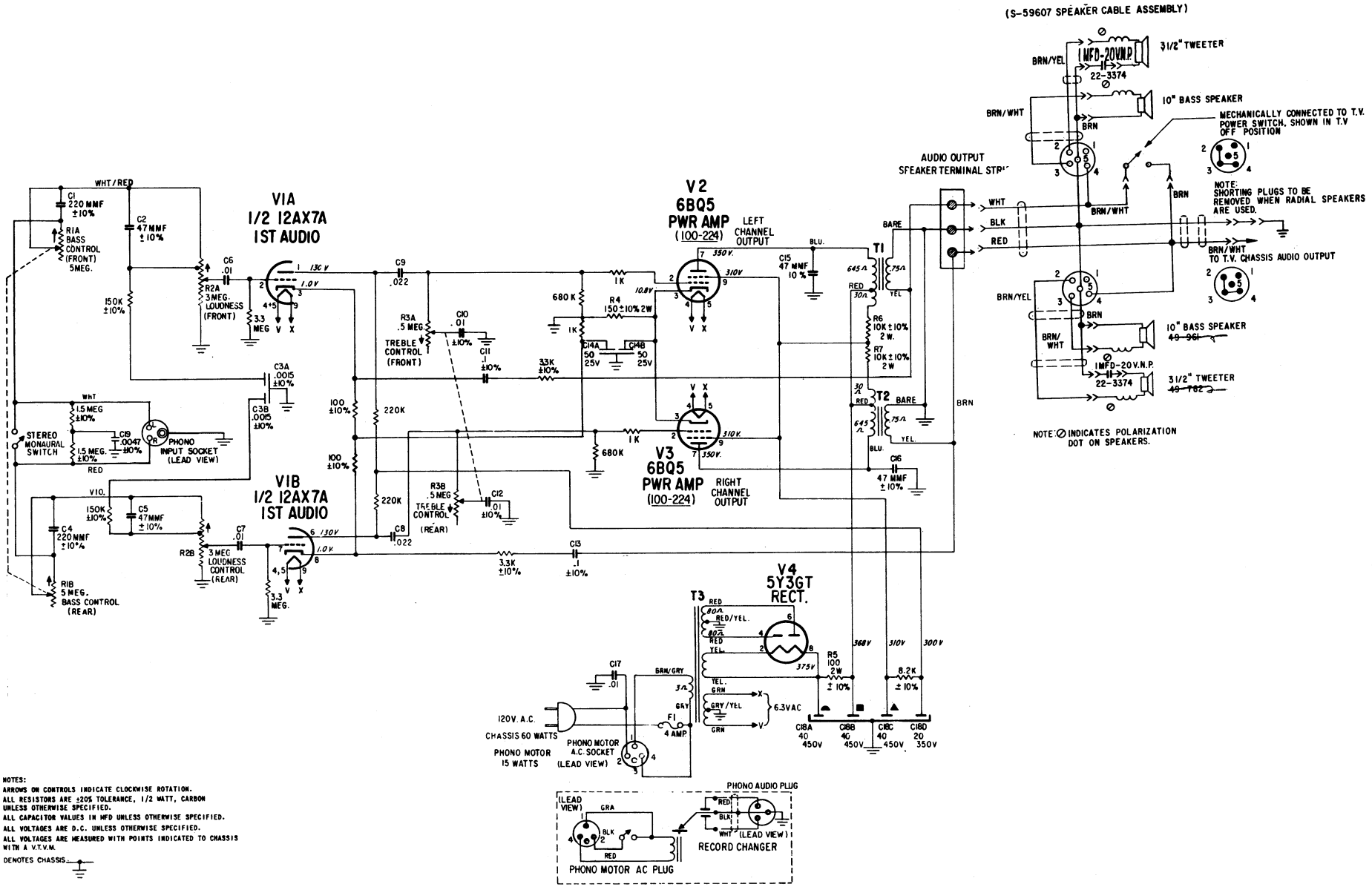

NOTES:
ARROWS ON CONTROLS INDICATE CLOCKWISE ROTATION.
ALL RESISTORS ARE ±20% TOLERANCE, 1/2 WATT, CARBON UNLESS OTHERWISE SPECIFIED.
ALL CAPACITOR VALUES IN MFD UNLESS OTHERWISE SPECIFIED.
ALL VOLTAGES ARE D.C. UNLESS OTHERWISE SPECIFIED.
ALL VOLTAGES ARE MEASURED WITH POINTS INDICATED TO CHASSIS WITH A V.T.V.M.
DENOTES CHASSIS

4L22 SCHEMATIC FOR MODEL 7100

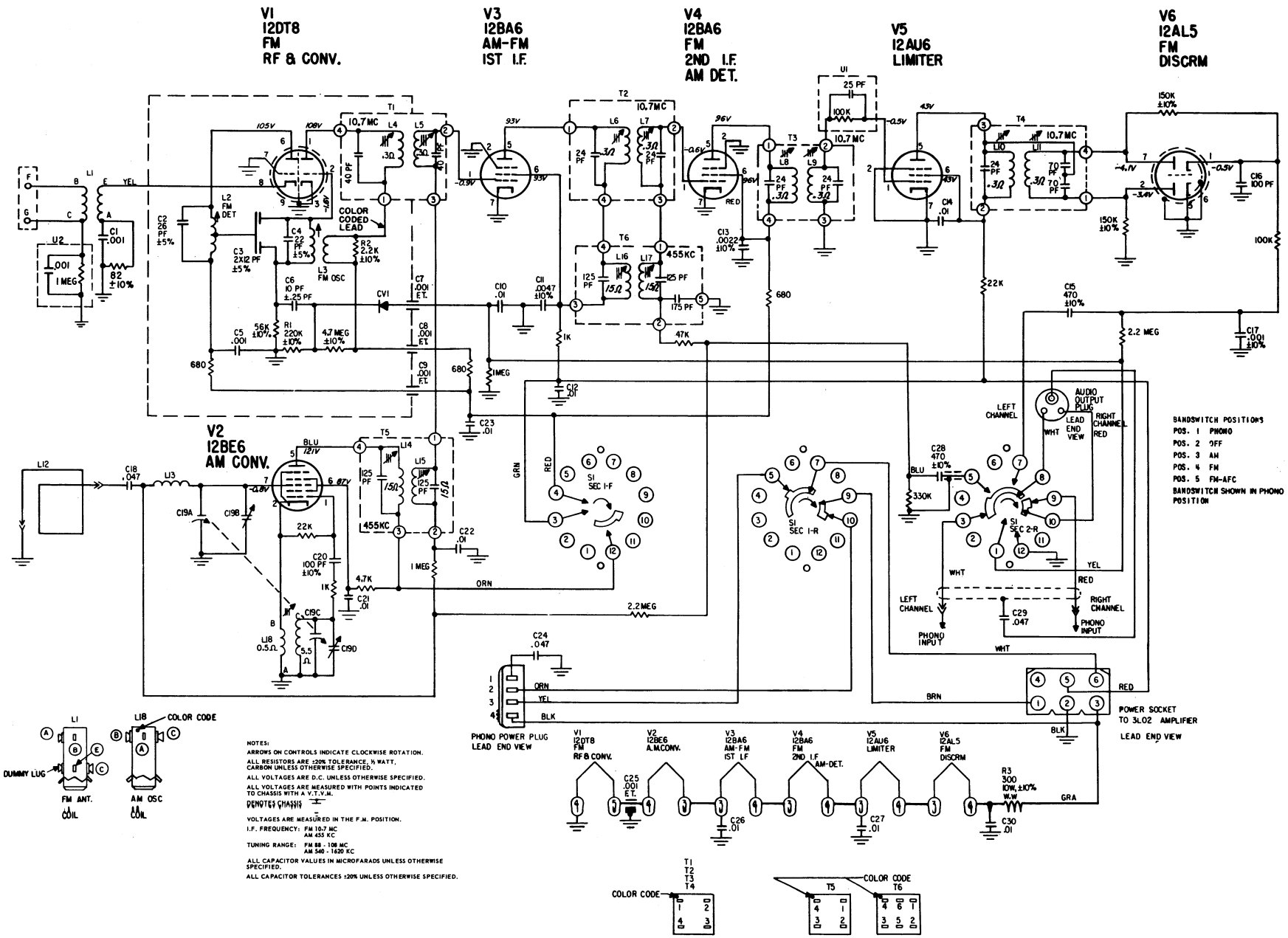

6L01 SCHEMATIC FOR MODELS RT1960, RM2420 & RM2601

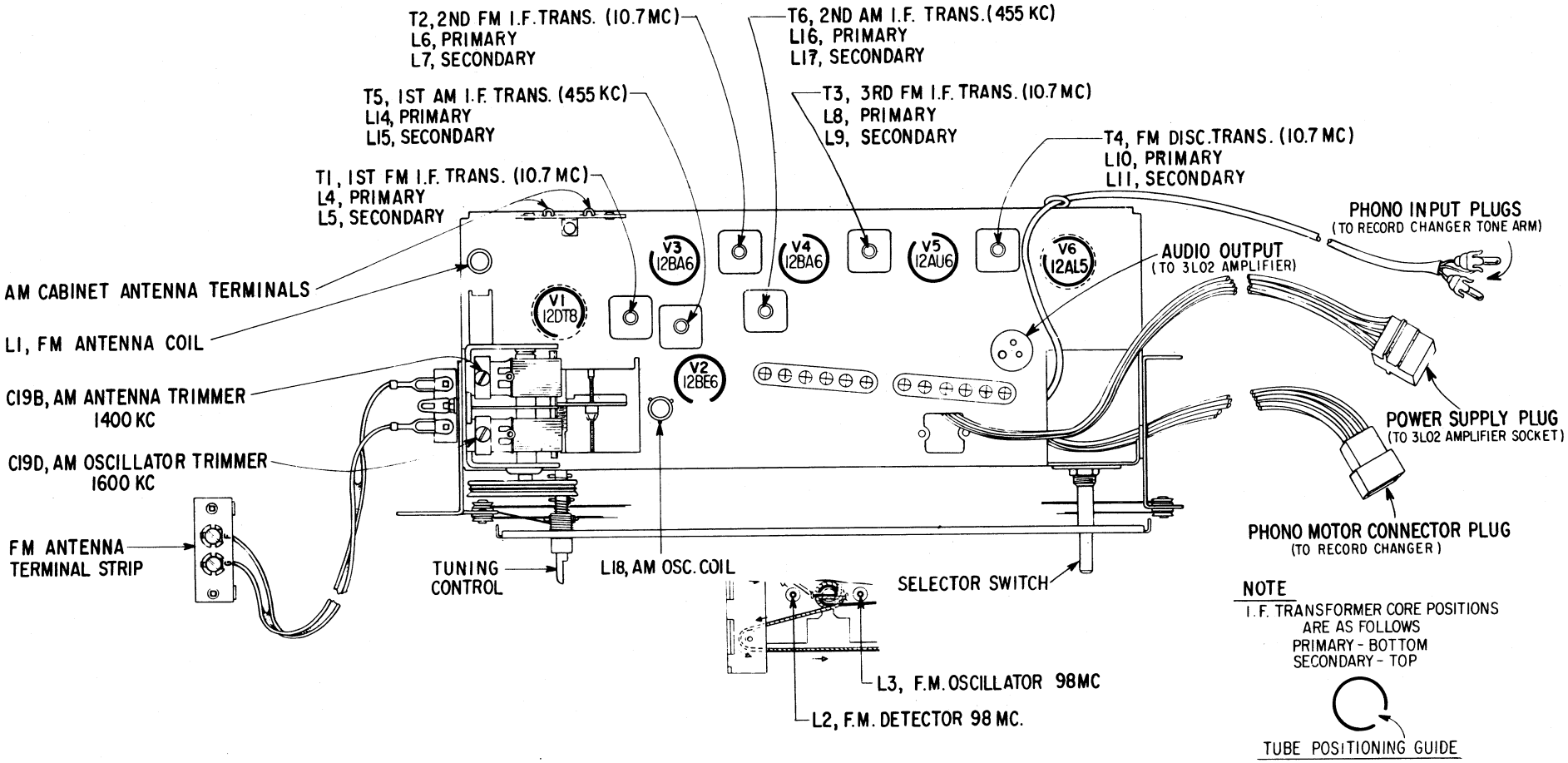

6L01 TUBE LAYOUT FOR MODELS RT1960, RM2420 & RM2601

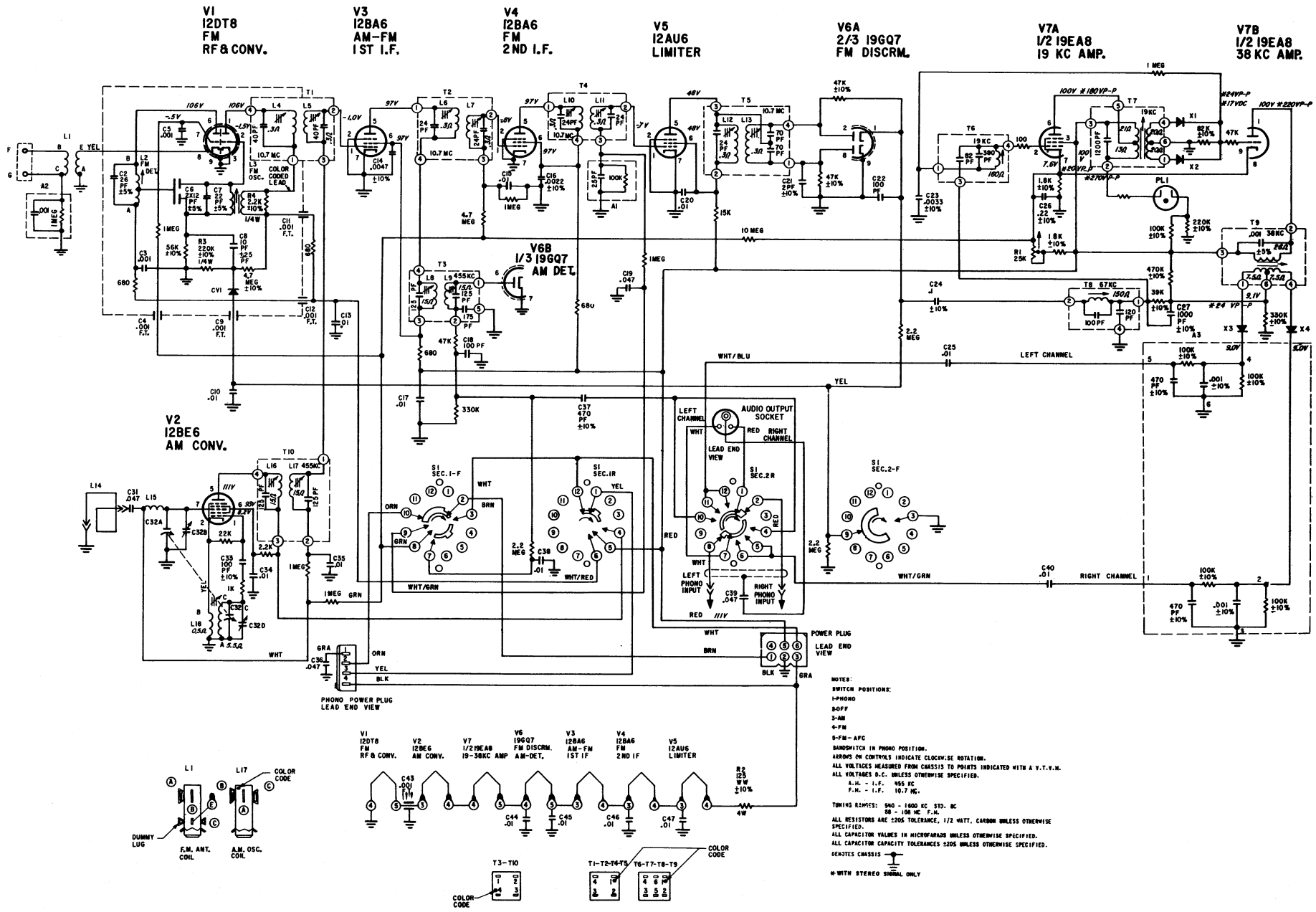

7L01 & 7L01Z SCHEMATIC FOR MODELS MM2420, MM2603 & MM2604

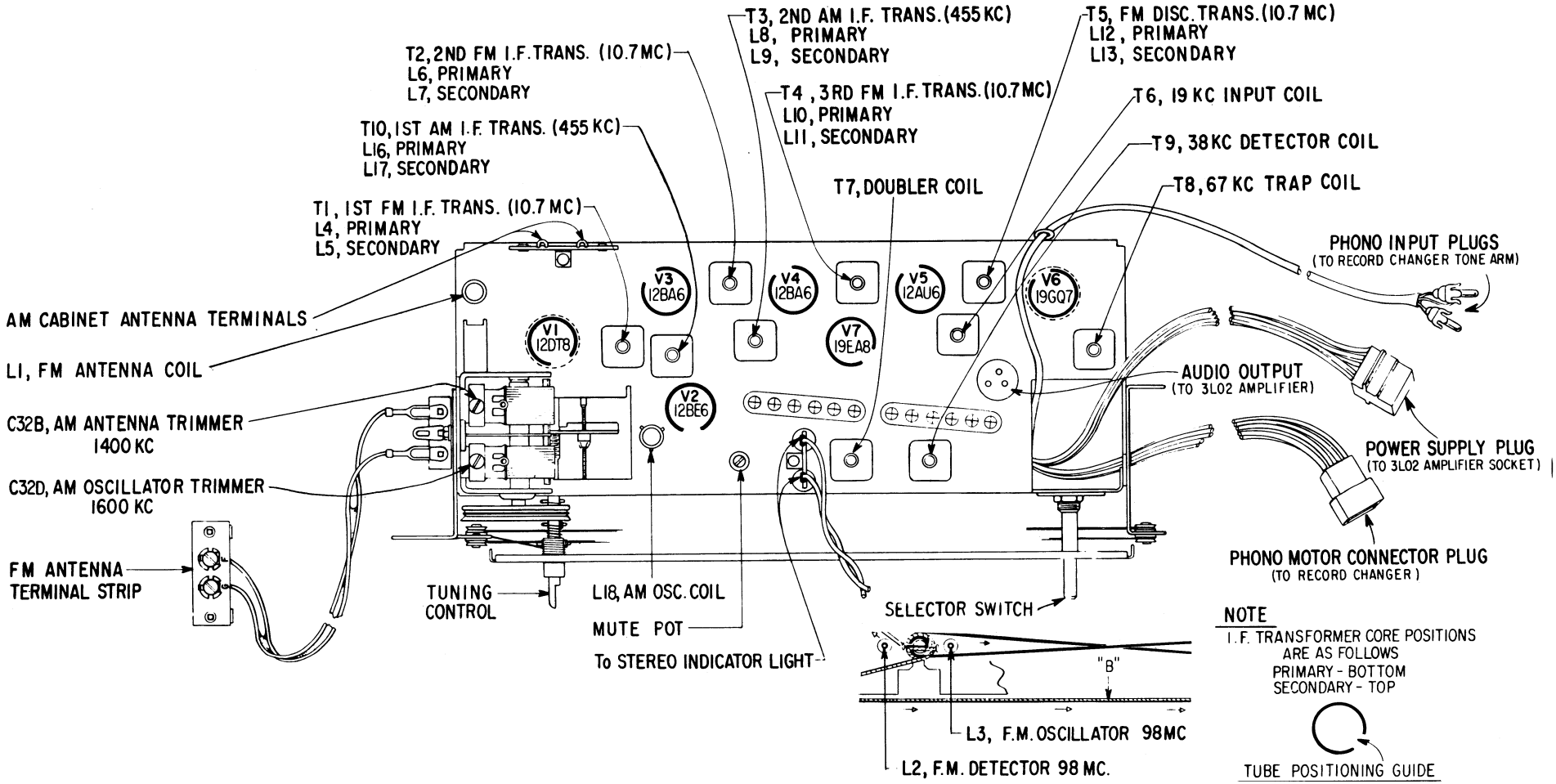

7L01 & 7L01Z TUBE LAYOUT FOR MODELS MM2420, MM2603 & MM2604

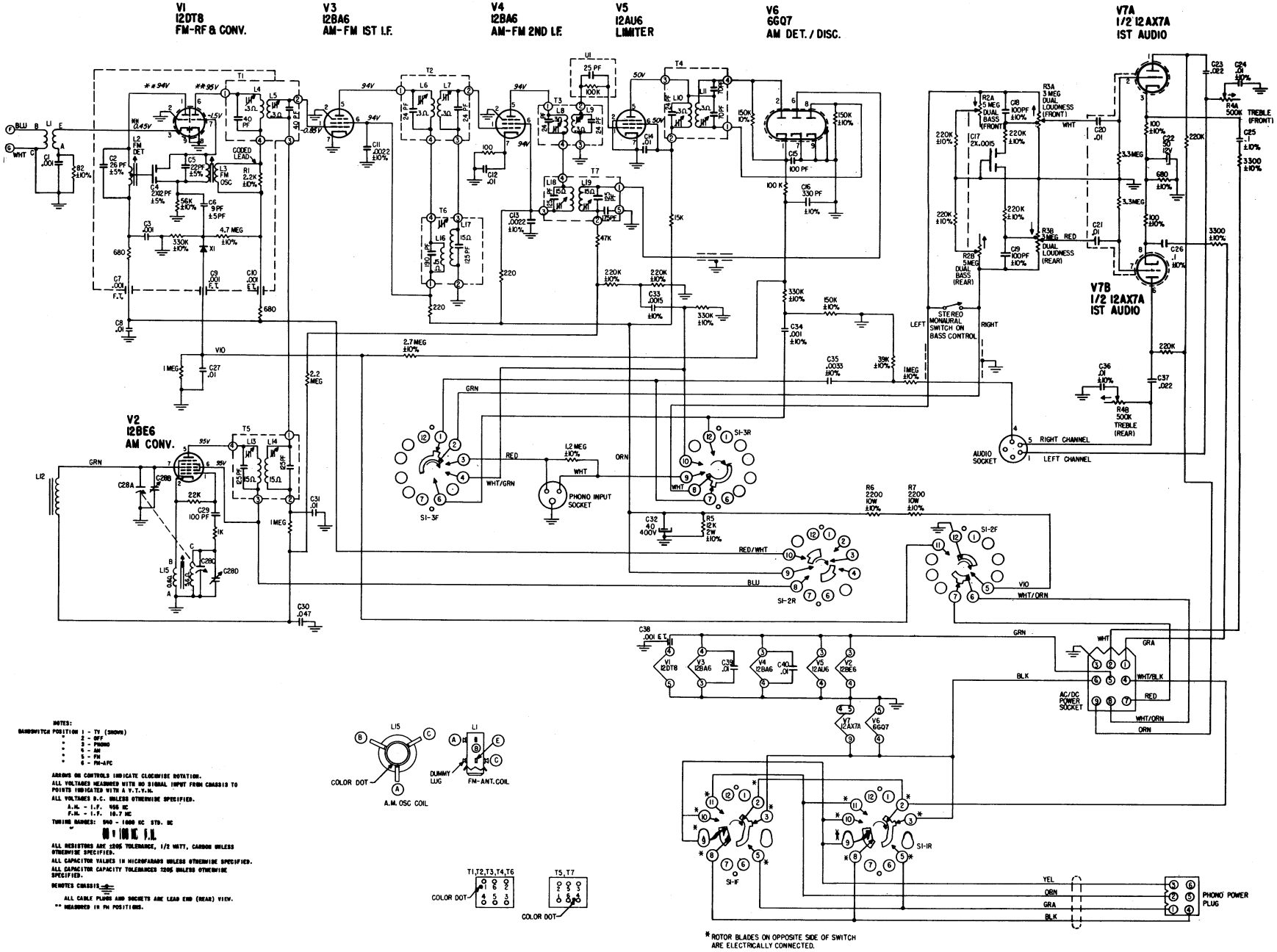

7L22 SCHEMATIC FOR MODEL RM2784

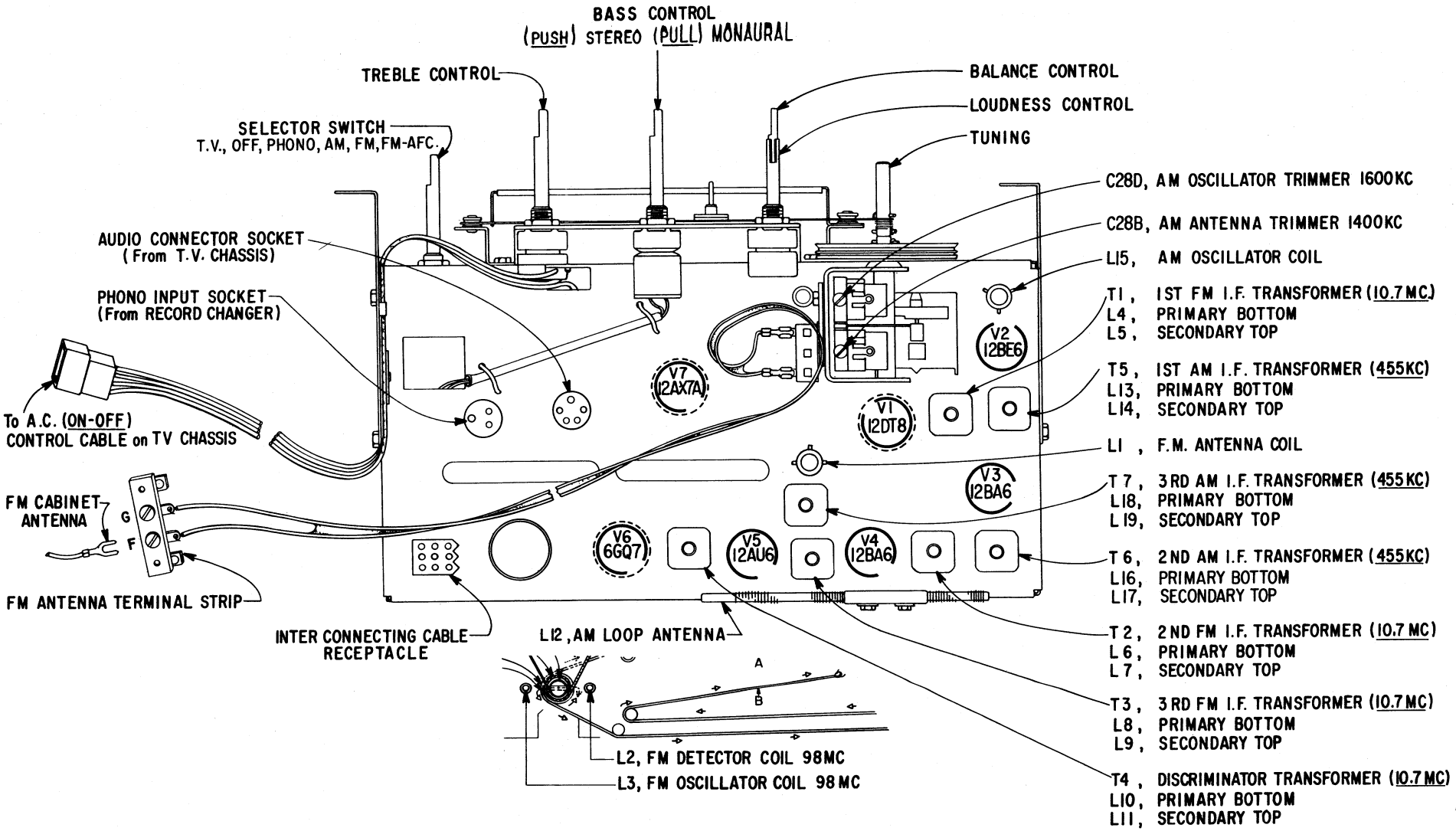

7L22 TUBE LAYOUT FOR MODEL RM2784

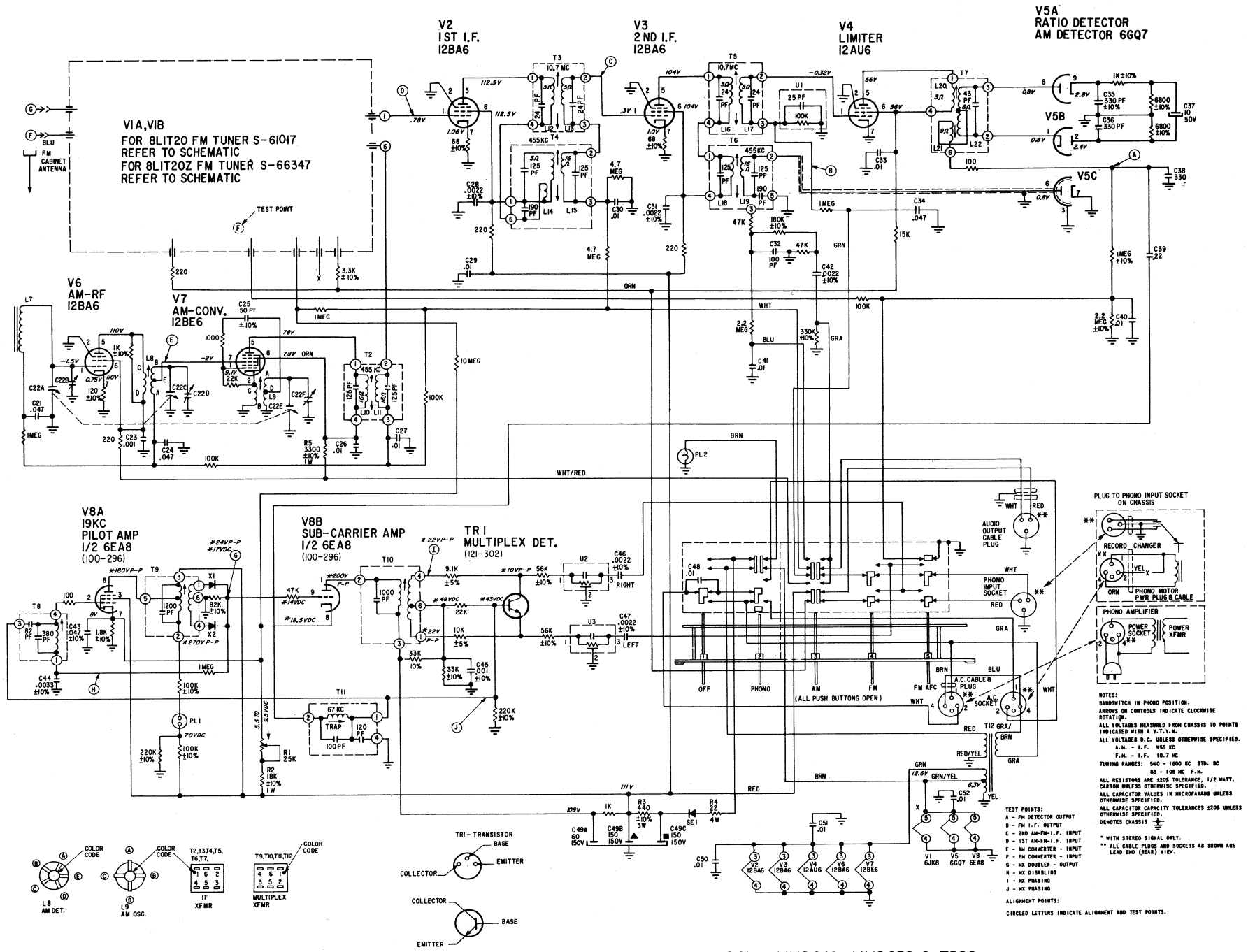

8L1T20Z SCHEMATIC FOR MODELS MM2606, MM2607, MM2608, MM2610, MM2640, MM2650 & 7300

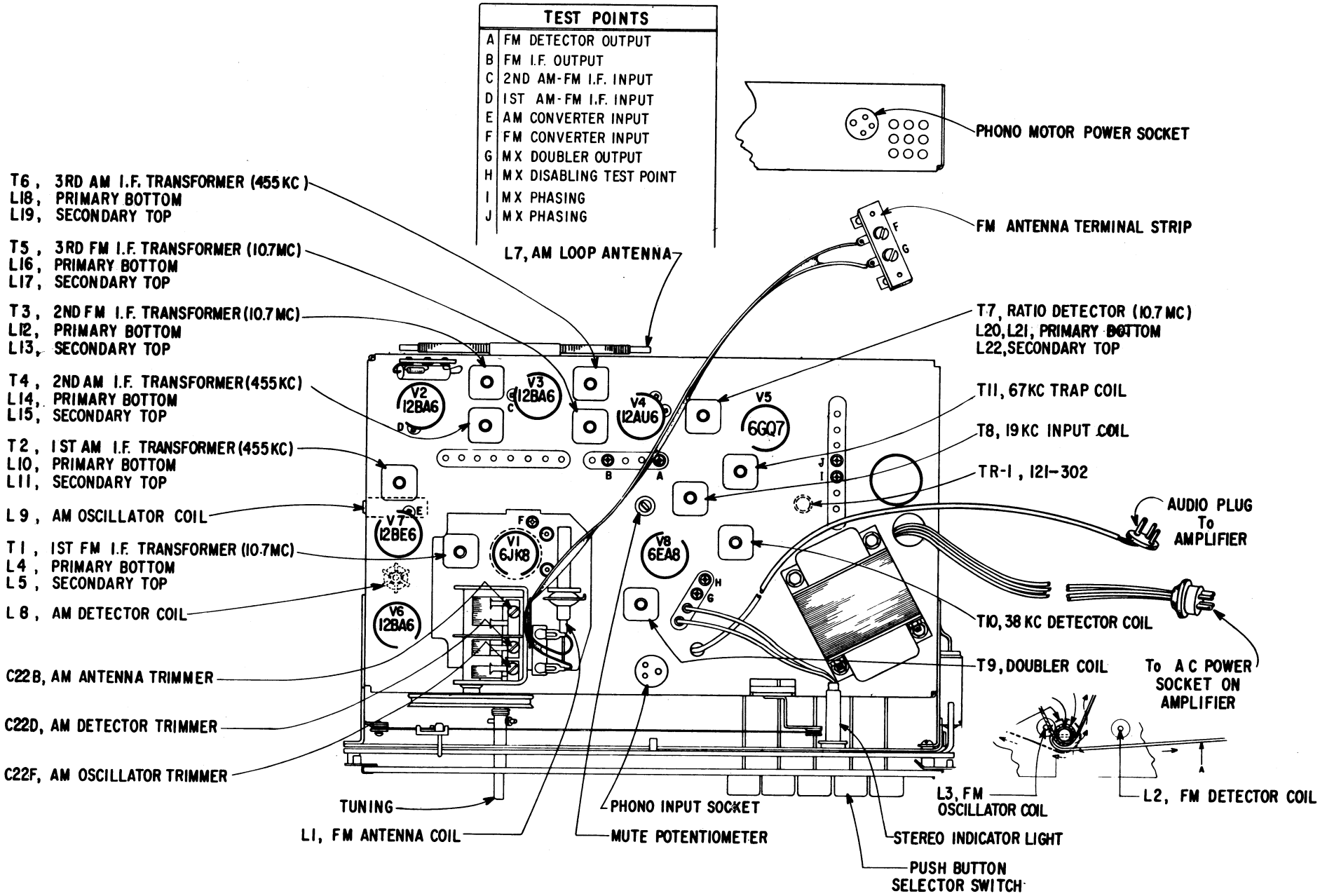

8L1T20Z TUBE LAYOUT FOR MODELS MM2606, MM2607, MM2608, MM2610, MM2640, MM2650 & 7300

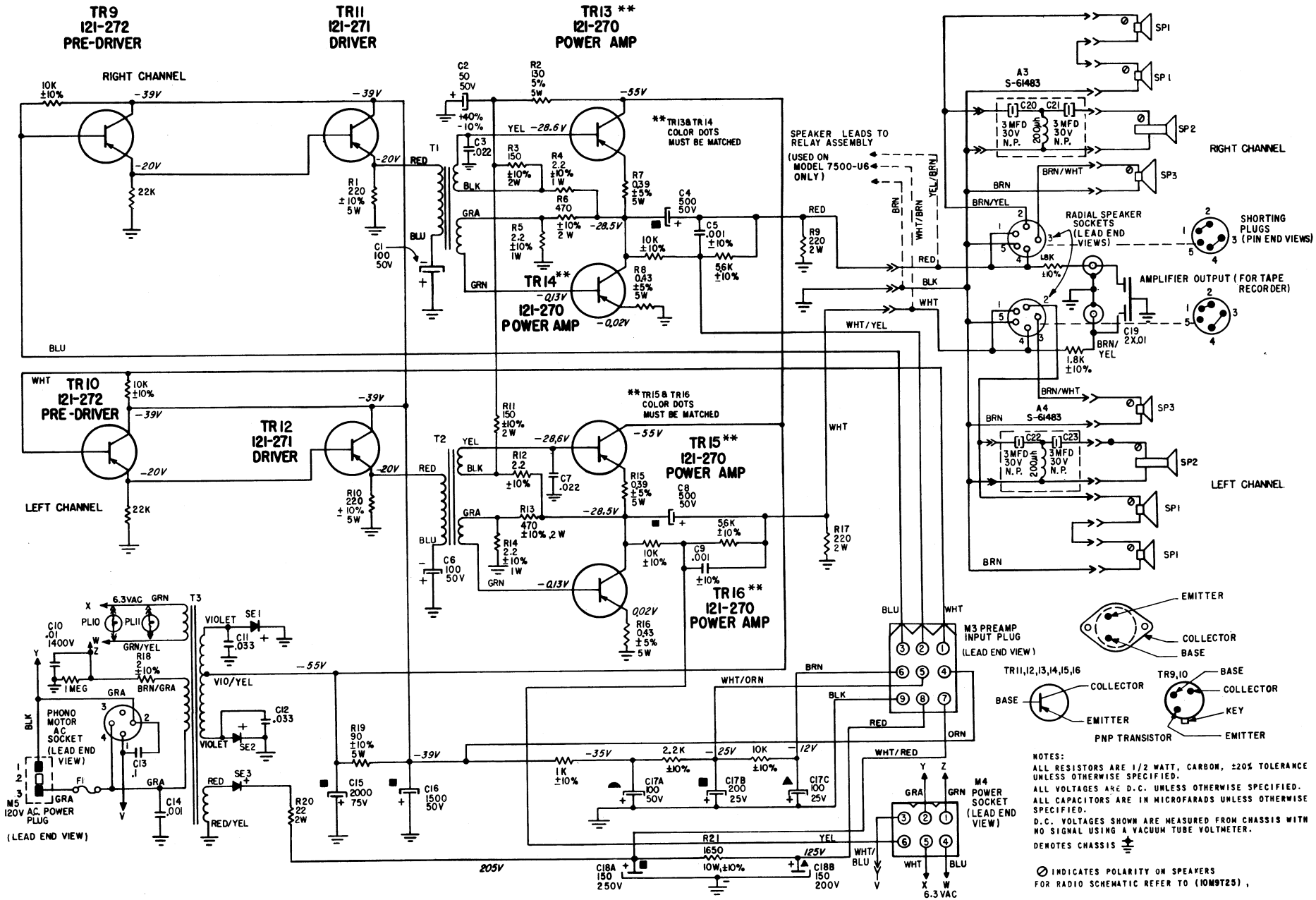

8MT25 SCHEMATIC FOR MODELS MM2670, MM2675, MM2685 & 7500-6

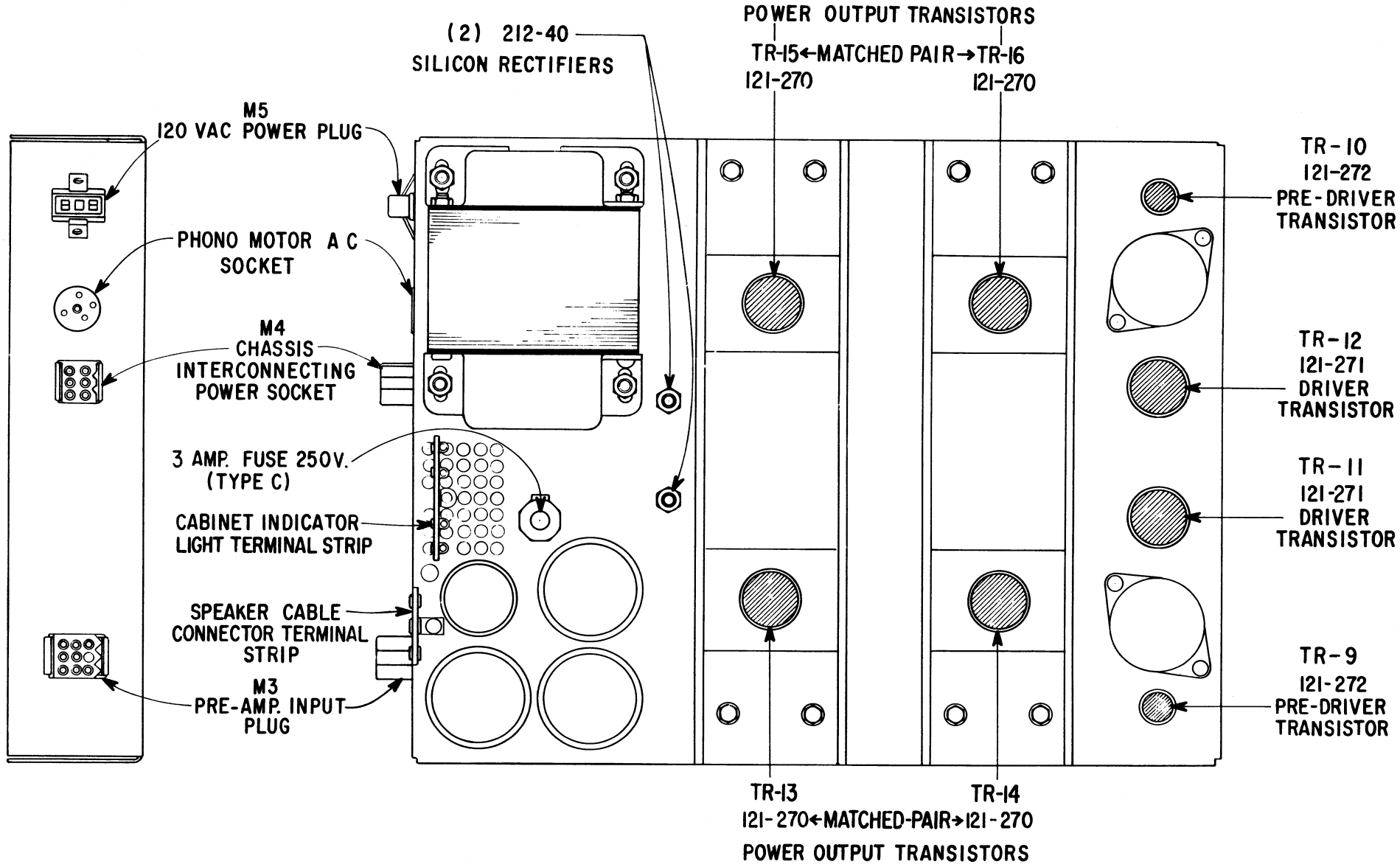

8MT25 TRANSISTOR LAYOUT FOR MODELS MM2670, MM2675, MM2685 & 7500-6

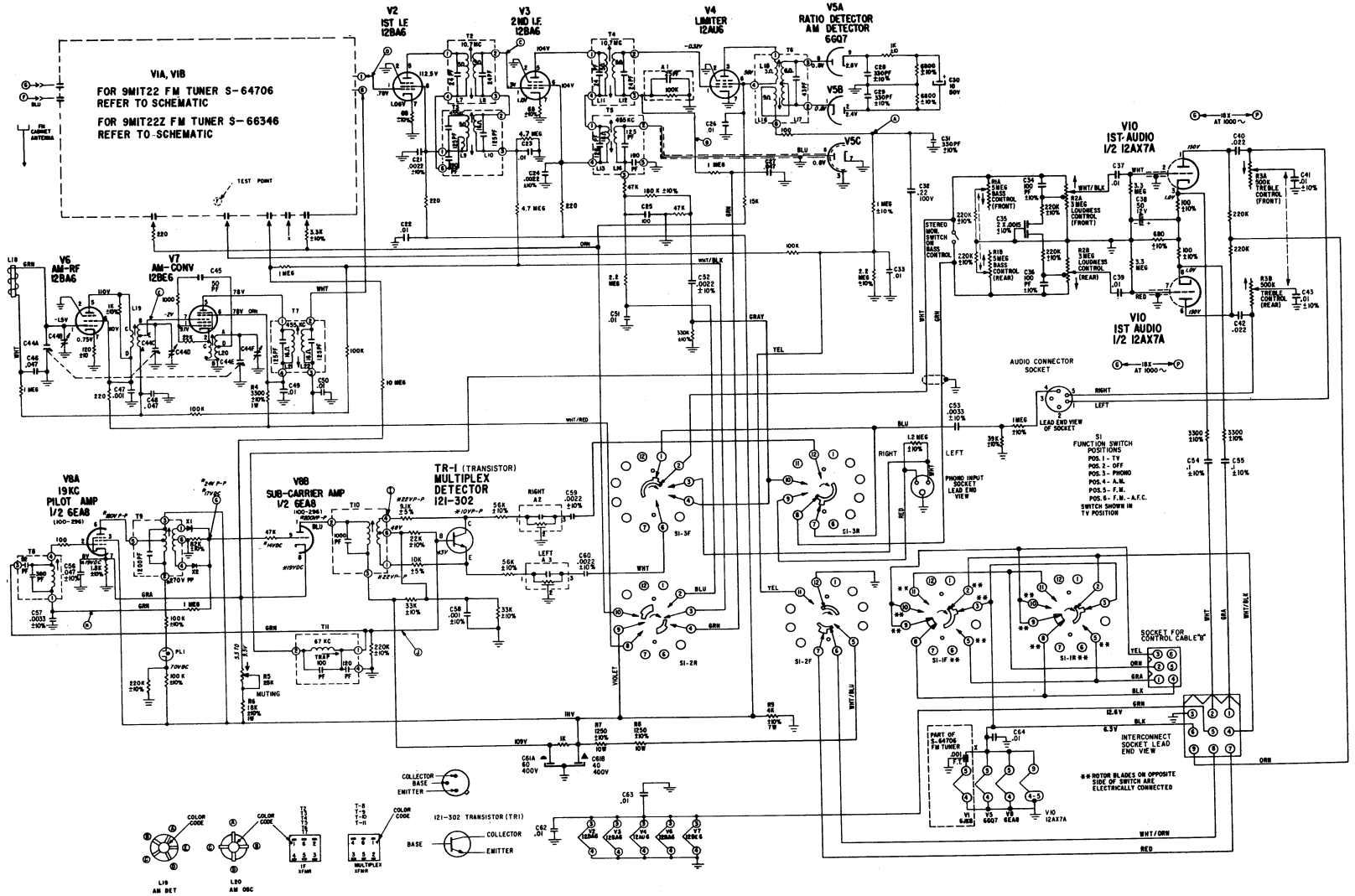

NOTES:

ARROWS ON CONTROLS INDICATE CLOCKWISE ROTATION.

ALL VOLTAGES ARE D.C. MEASURED RELATIVE TO CHASSIS WITH A VTVM (11 MEG. INPUT RESISTANCE). FM OR AM ONLY CIRCUITS ARE MEASURED WITH FUNCTION SWITCH IN FM OR AM POSITION AND NO SIGNAL. MULTIPLEX CIRCUIT VOLTAGES MARKED WITH AN ASTERISK ARE MEASURED WITH FUNCTION SWITCH IN FM POSITION, WITH STEREO SIGNAL LAMP ON. ALL OTHER VOLTAGES ARE MEASURED WITH FUNCTION SWITCH IN FM POSITION AND NO SIGNAL.

A.M. - I.F. 455 KC
F.M. - I.F. 10.7 MC

TUNING RANGES: 540 - 1600 KC STD. BC
88 - 108 MC F.M.

ALL RESISTORS ARE ±20% TOLERANCE, ½ WATT, CARBON UNLESS OTHERWISE SPECIFIED.

ALL CAPACITOR VALUES IN MICROFARADS UNLESS OTHERWISE SPECIFIED.

ALL CAPACITOR CAPACITY TOLERANCES ±20% UNLESS OTHERWISE SPECIFIED.

DENOTES CHASSIS

ALL CABLE PLUGS AND SOCKETS AS SHOWN ARE LEAD END (REAR) VIEW.

TEST POINTS:
A - FM DETECTOR OUTPUT
B - FM I.F. OUTPUT
C - 2ND AM-FM-IF INPUT
D - 1ST AM-FM-IF INPUT
E - AM COVERTER - INPUT
F - FM CONVERTER - INPUT
G - HX DOUBLER - OUTPUT
H - HX DISABLING
I - HX PHASING
J - HX PHASING

ALIGNMENT POINTS: (A)→
CIRCLED LETTERS INDICATE ALIGNMENT AND TEST POINTS.

9M1T22 & 9M1T22Z SCHEMATIC FOR MODEL MM2784

TEST POINTS	
A	FM DETECTOR OUTPUT
B	FM I.F. OUTPUT
C	2ND AM-FM I.F. INPUT
D	IST AM-FM I.F. INPUT
E	AM CONVERTER INPUT
F	FM CONVERTER INPUT
G	MX DOUBLER OUTPUT
H	MX DISABLING TEST POINT
I	MX PHASING
J	MX PHASING

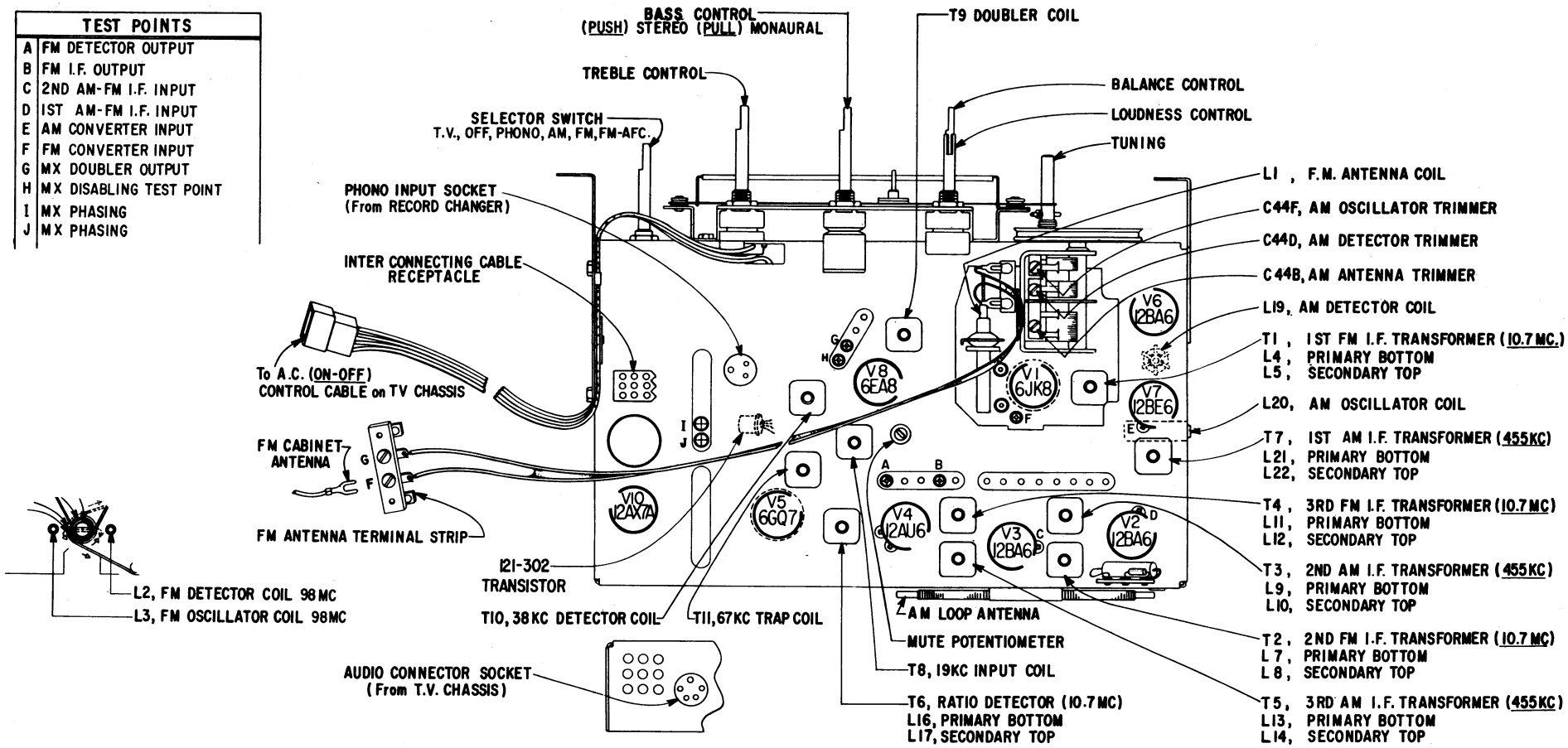

9M1T22 & 9M1T22Z TUBE & TRANSISTOR LAYOUT FOR MODEL MM2784

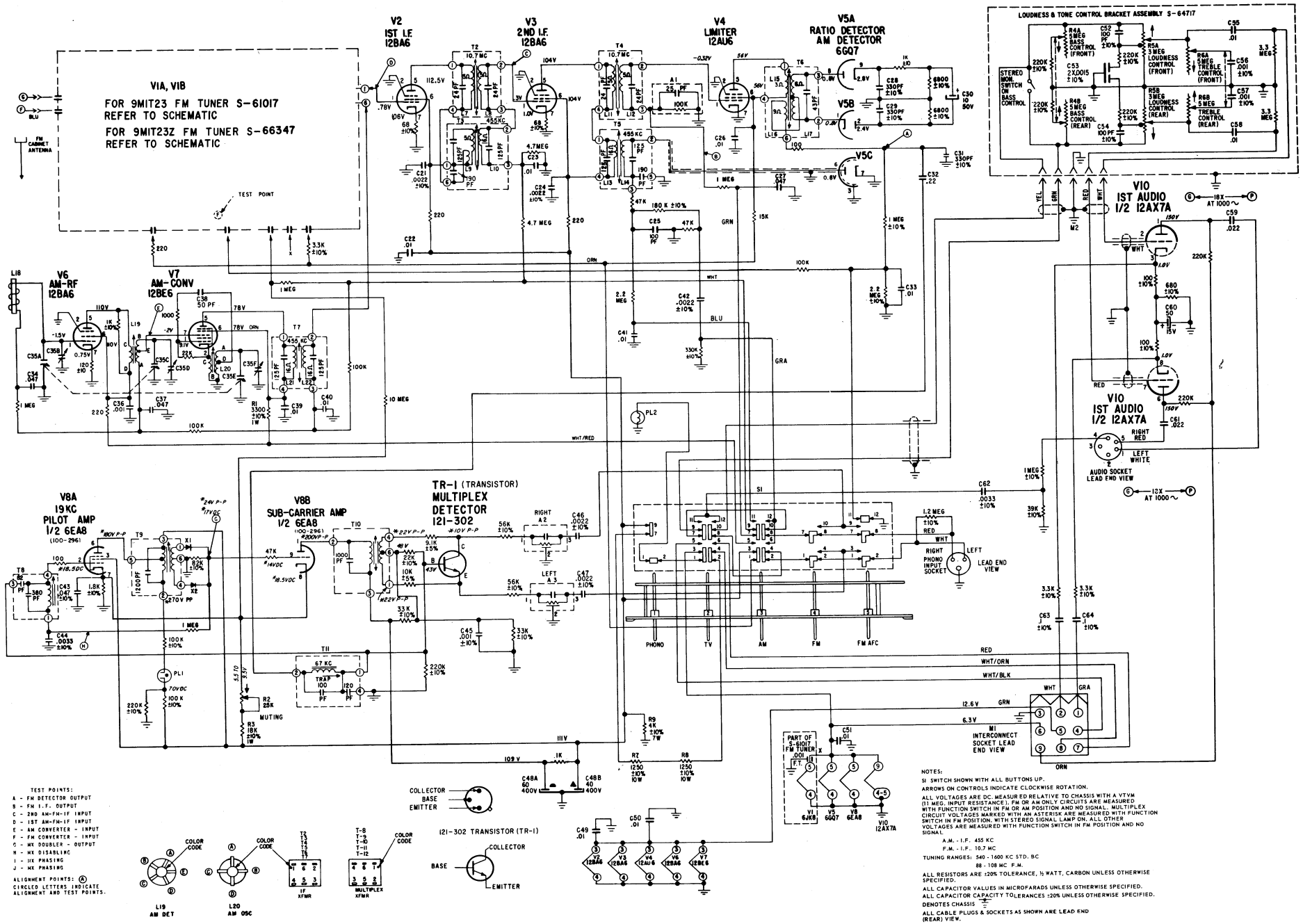

TEST POINTS:
A - FM DETECTOR OUTPUT
B - FM I.F. OUTPUT
C - 2ND AM-FM-IF INPUT
D - 1ST AM-FM-IF INPUT
E - AM CONVERTER - INPUT
F - FM CONVERTER - INPUT
G - MX DOUBLER - OUTPUT
H - MX DISABLING
I - MX PHASING
J - MX PHASING

ALIGNMENT POINTS: Ⓐ
CIRCLED LETTERS INDICATE ALIGNMENT AND TEST POINTS.

NOTES:
S1 SWITCH SHOWN WITH ALL BUTTONS UP.
ARROWS ON CONTROLS INDICATE CLOCKWISE ROTATION.
ALL VOLTAGES ARE DC. MEASURED RELATIVE TO CHASSIS WITH A VTVM (11 MEG. INPUT RESISTANCE). FM OR AM ONLY CIRCUITS ARE MEASURED WITH FUNCTION SWITCH IN FM OR AM POSITION AND NO SIGNAL. MULTIPLEX CIRCUIT VOLTAGES MARKED WITH AN ASTERISK ARE MEASURED WITH FUNCTION SWITCH IN FM POSITION. WITH STEREO SIGNAL LAMP ON. ALL OTHER VOLTAGES ARE MEASURED WITH FUNCTION SWITCH IN FM POSITION AND NO SIGNAL.
A.M. - I.F. 455 KC
F.M. - I.F. 10.7 MC
TUNING RANGES: 540 - 1600 KC STD. BC
88 - 108 MC F.M.
ALL RESISTORS ARE ±20% TOLERANCE, ½ WATT, CARBON UNLESS OTHERWISE SPECIFIED.
ALL CAPACITOR VALUES IN MICROFARADS UNLESS OTHERWISE SPECIFIED.
ALL CAPACITOR CAPACITY TOLERANCES ±20% UNLESS OTHERWISE SPECIFIED.
⏚ DENOTES CHASSIS
ALL CABLE PLUGS & SOCKETS AS SHOWN ARE LEAD END (REAR) VIEW.

9M1T23 & 9M1T23Z SCHEMATIC FOR MODEL MM2785

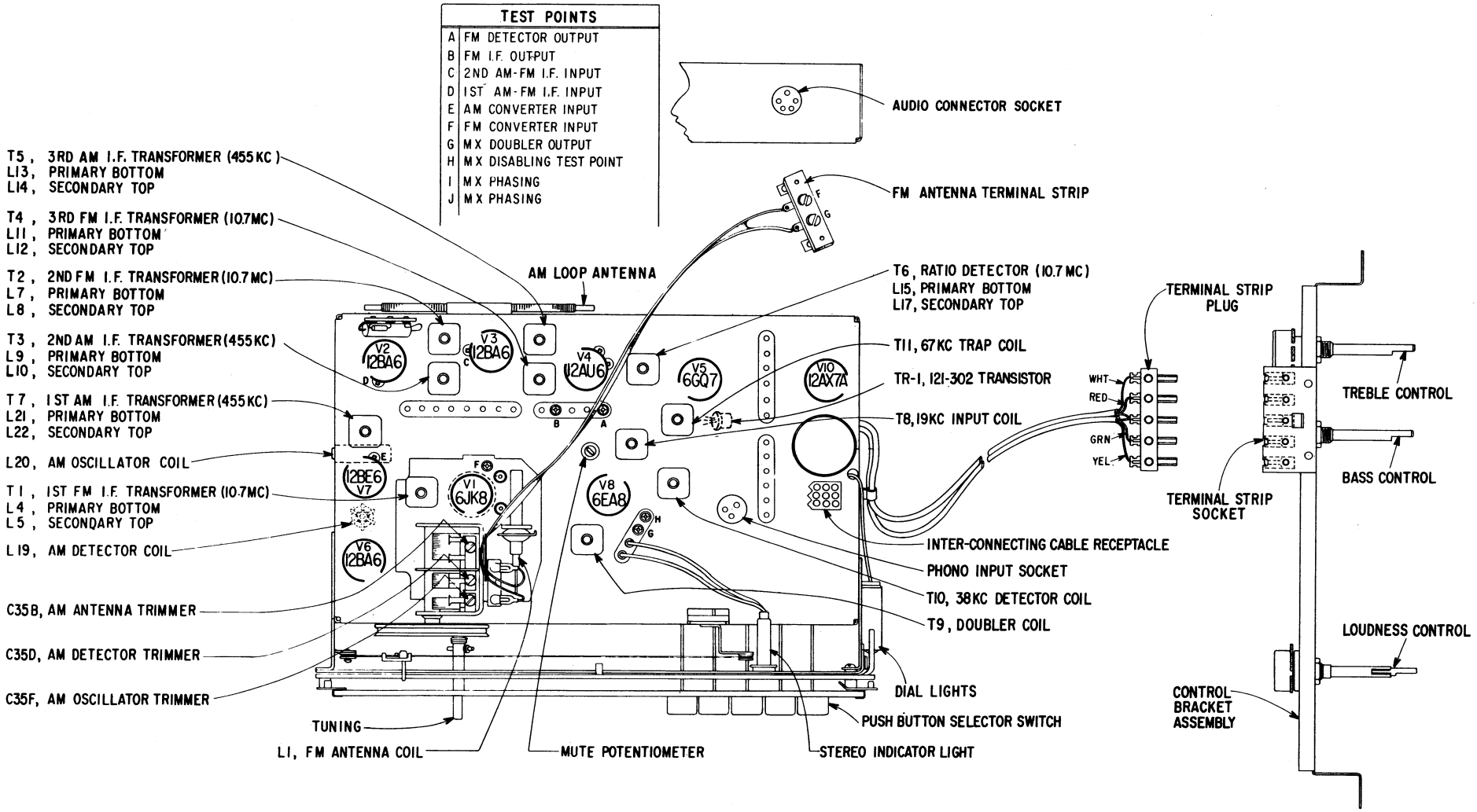

9M1T23 & 9M1T23Z TUBE & TRANSISTOR LAYOUT FOR MODEL MM2785

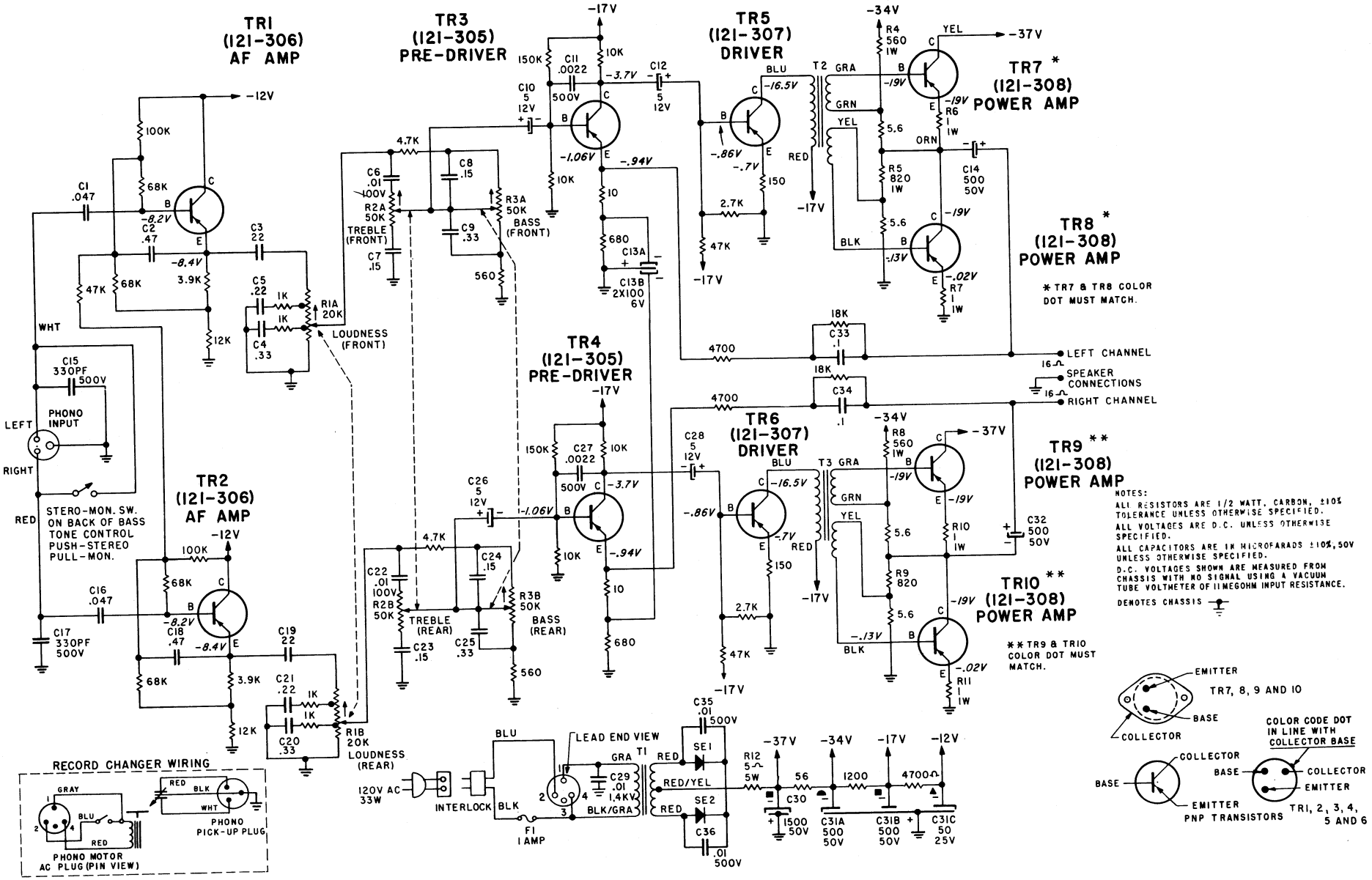

10MT25 SCHEMATIC FOR MODELS MM2606, MM2607 & 7300

SPEAKER HOOKUP FOR MODELS
MM2606 MM2607

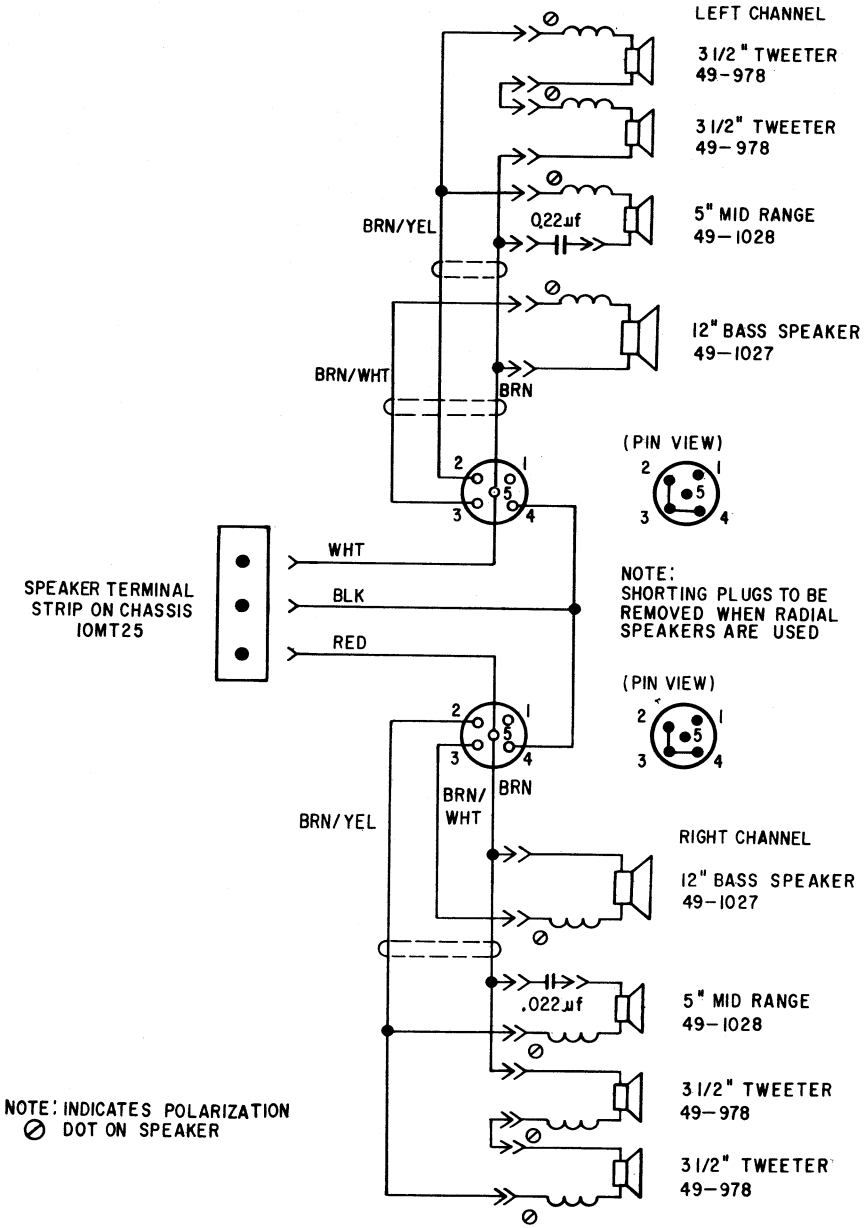

SPEAKER HOOKUP FOR
MODEL 7300WU
(S-66677 SPEAKER CABLE ASSEMBLY)

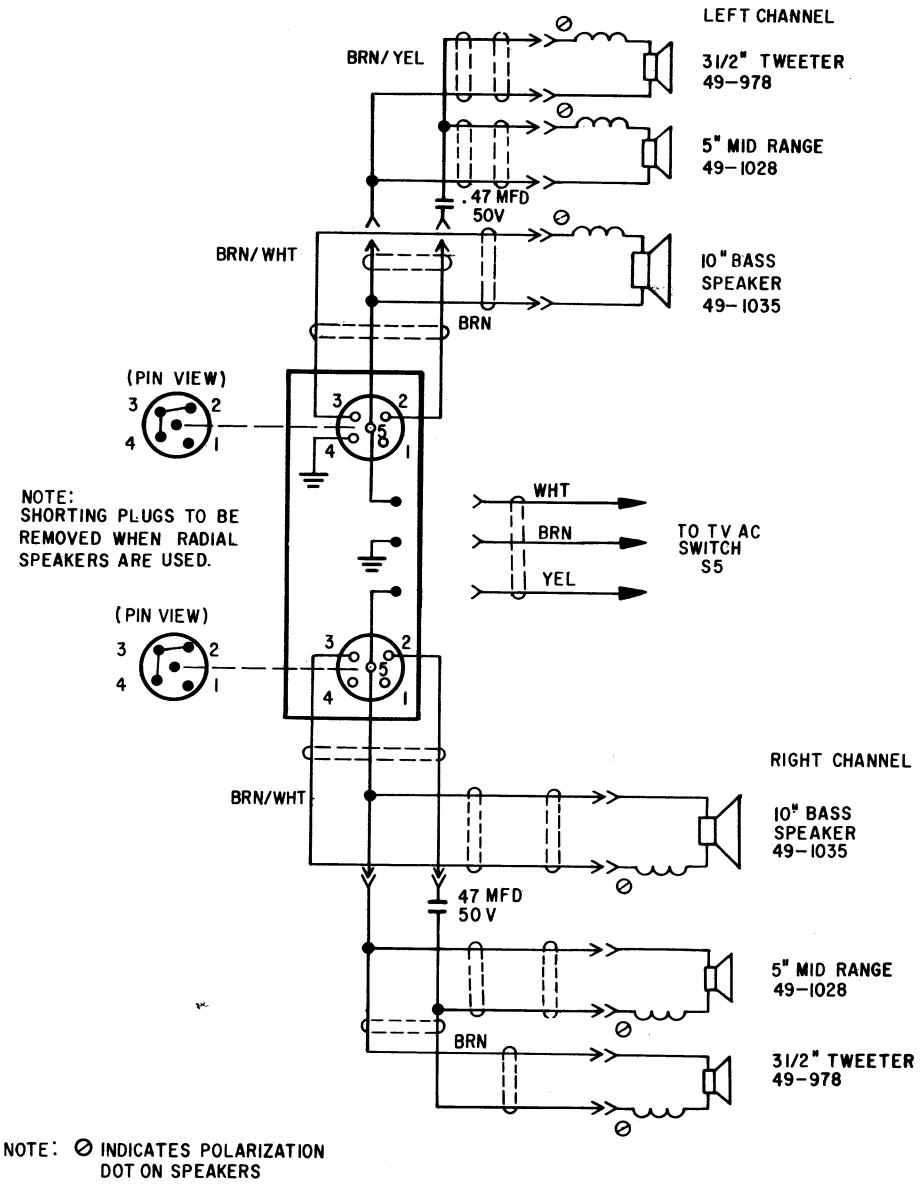

SPEAKER SCHEMATICS FOR MODELS MM2606, MM2607 & 7300

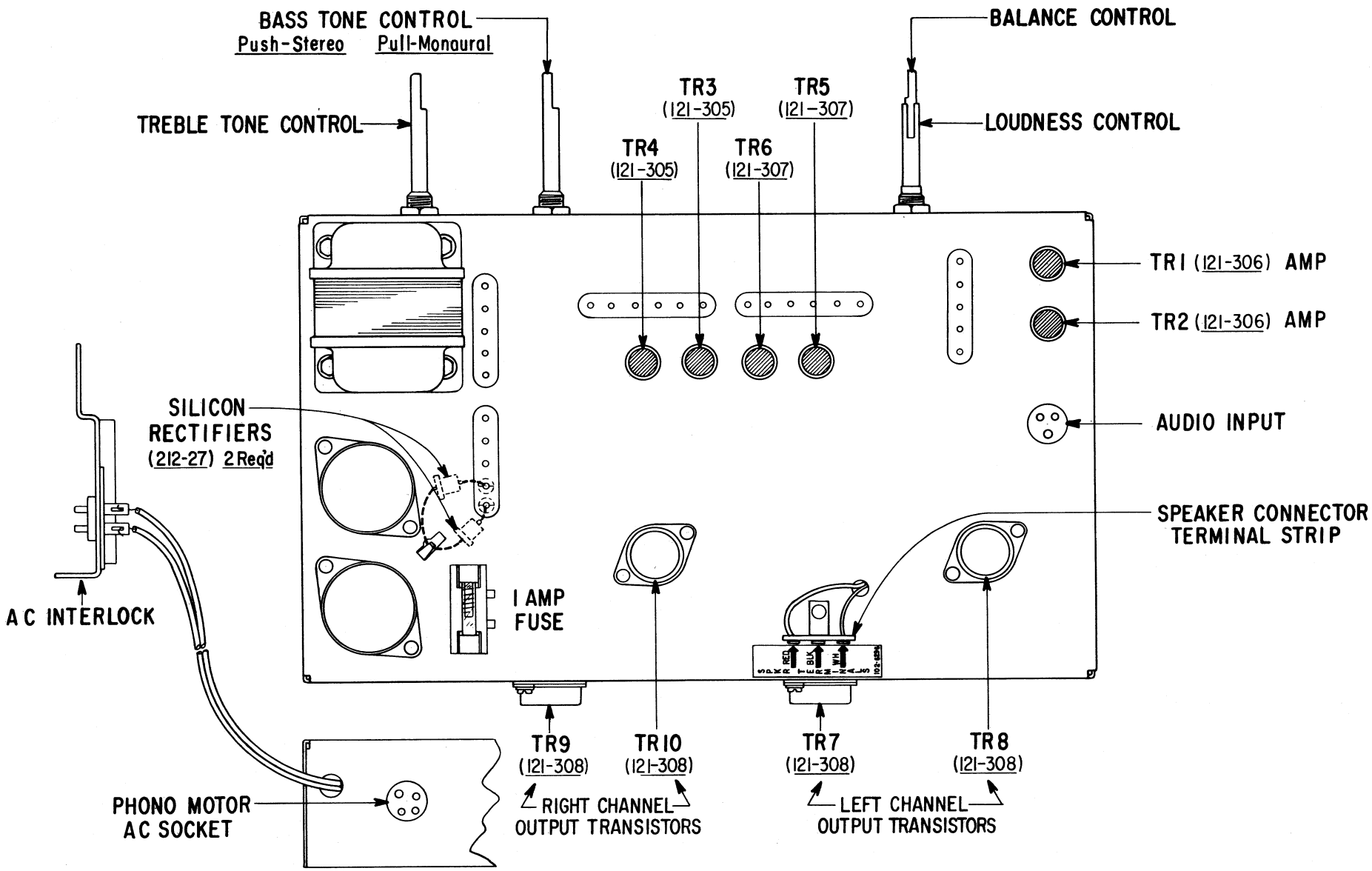

10MT25 TRANSISTOR LAYOUT FOR MODELS MM2606, MM2607 & 7300

S-66036
PRE-AMP. CHASSIS

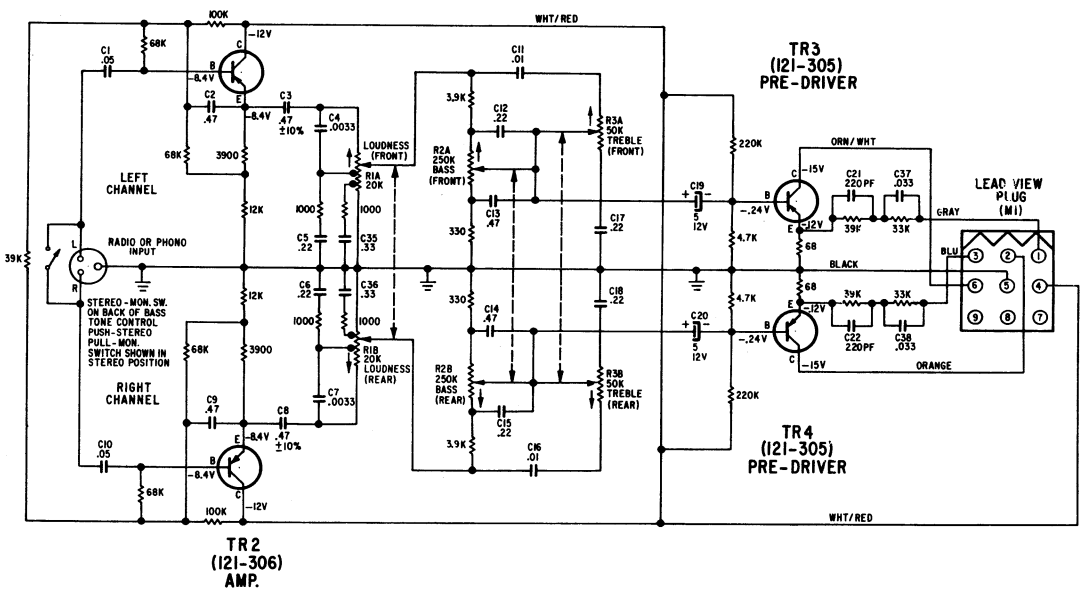

S-66035
POWER AMPLIFIER CHASSIS

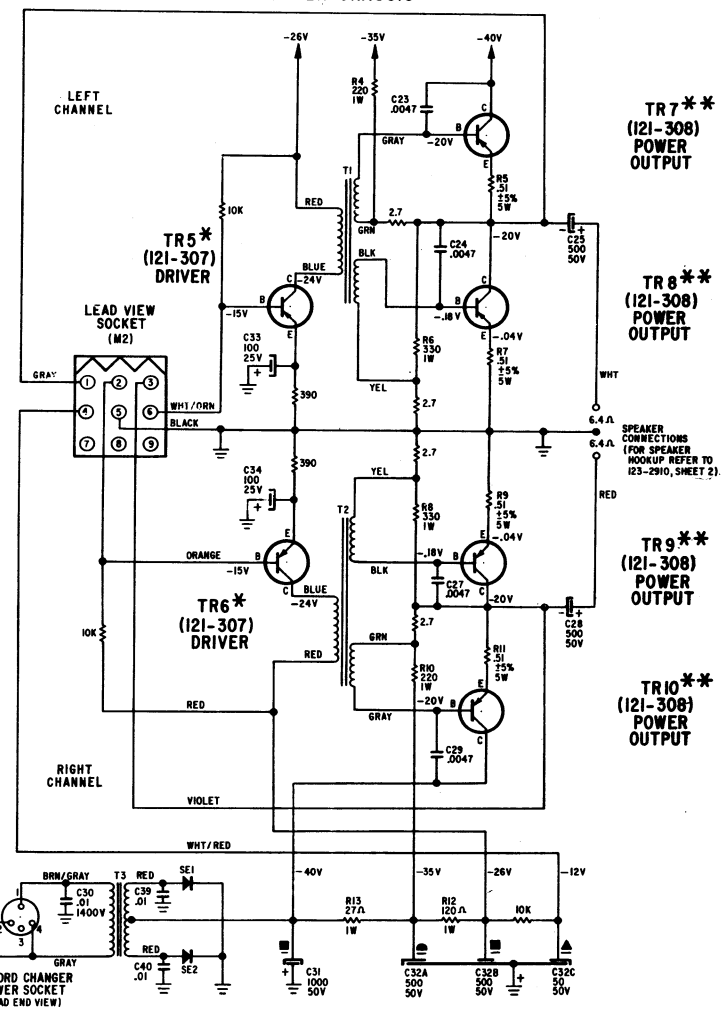

RECORD CHANGER

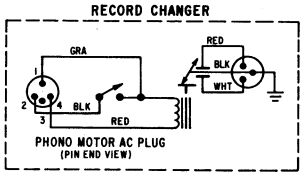

TRANSISTOR VIEWS

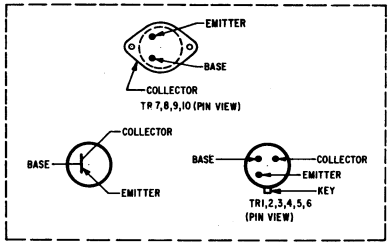

NOTES:
ALL RESISTORS ARE 1/2 WATT, CARBON, ±10% TOLERANCE, UNLESS OTHERWISE SPECIFIED.
ALL CAPACITORS ARE IN MICROFARADS UNLESS OTHERWISE SPECIFIED.
ALL VOLTAGES ARE D.C. UNLESS OTHERWISE SPECIFIED, MEASURED FROM CHASSIS WITH NO SIGNAL USING A VTVM.
⏚ DENOTES CHASSIS
* TR5 & 6 MUST USE HEAT DISSIPATOR (ZENITH PART NO. 126-1085).
** ALL 121-308 TRANSISTORS IN ANY ONE CHASSIS MUST HAVE THE SAME COLOR CODE.

10MT26 SCHEMATIC FOR MODELS MM2608, MM2610, MM2640 & MM2650

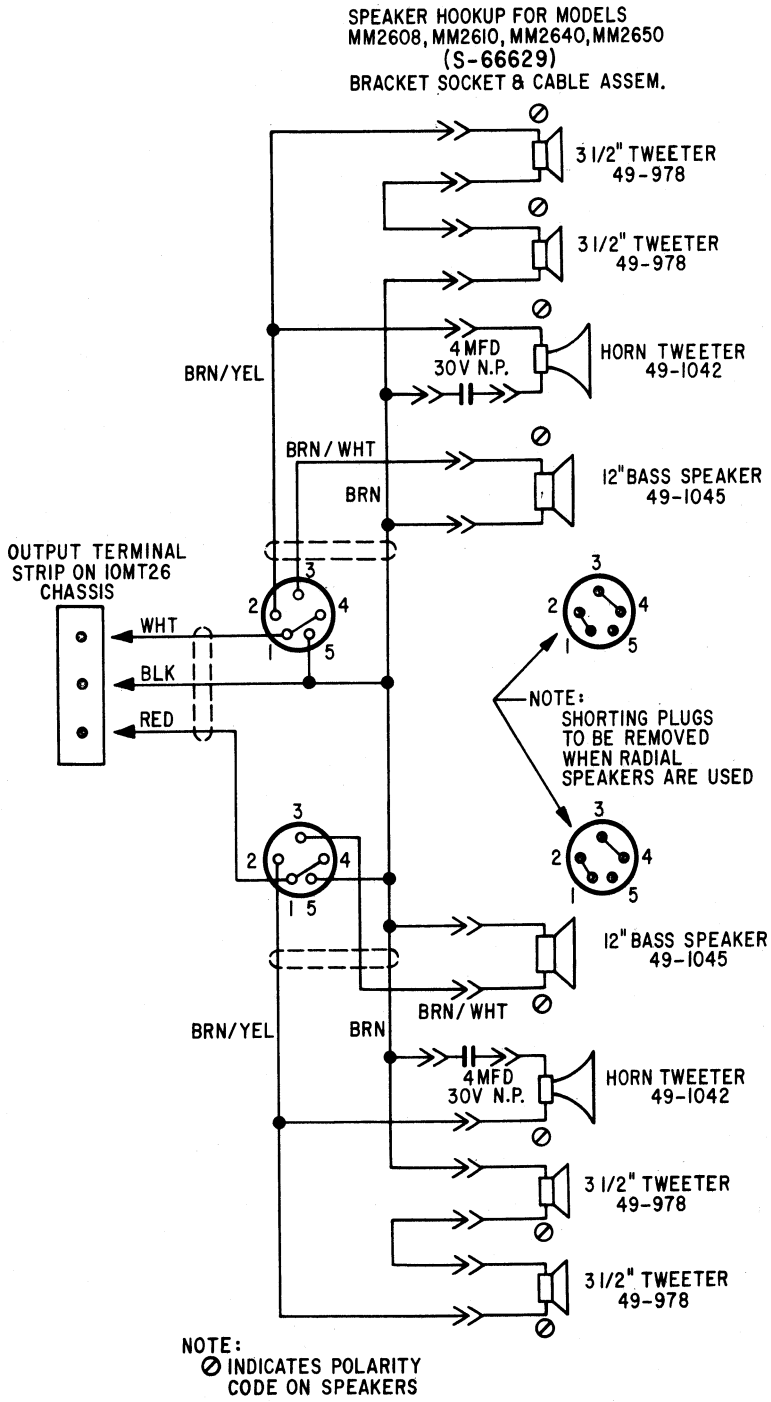

SPEAKER SCHEMATIC FOR MODELS MM2608, MM2610, MM2640 & MM2650

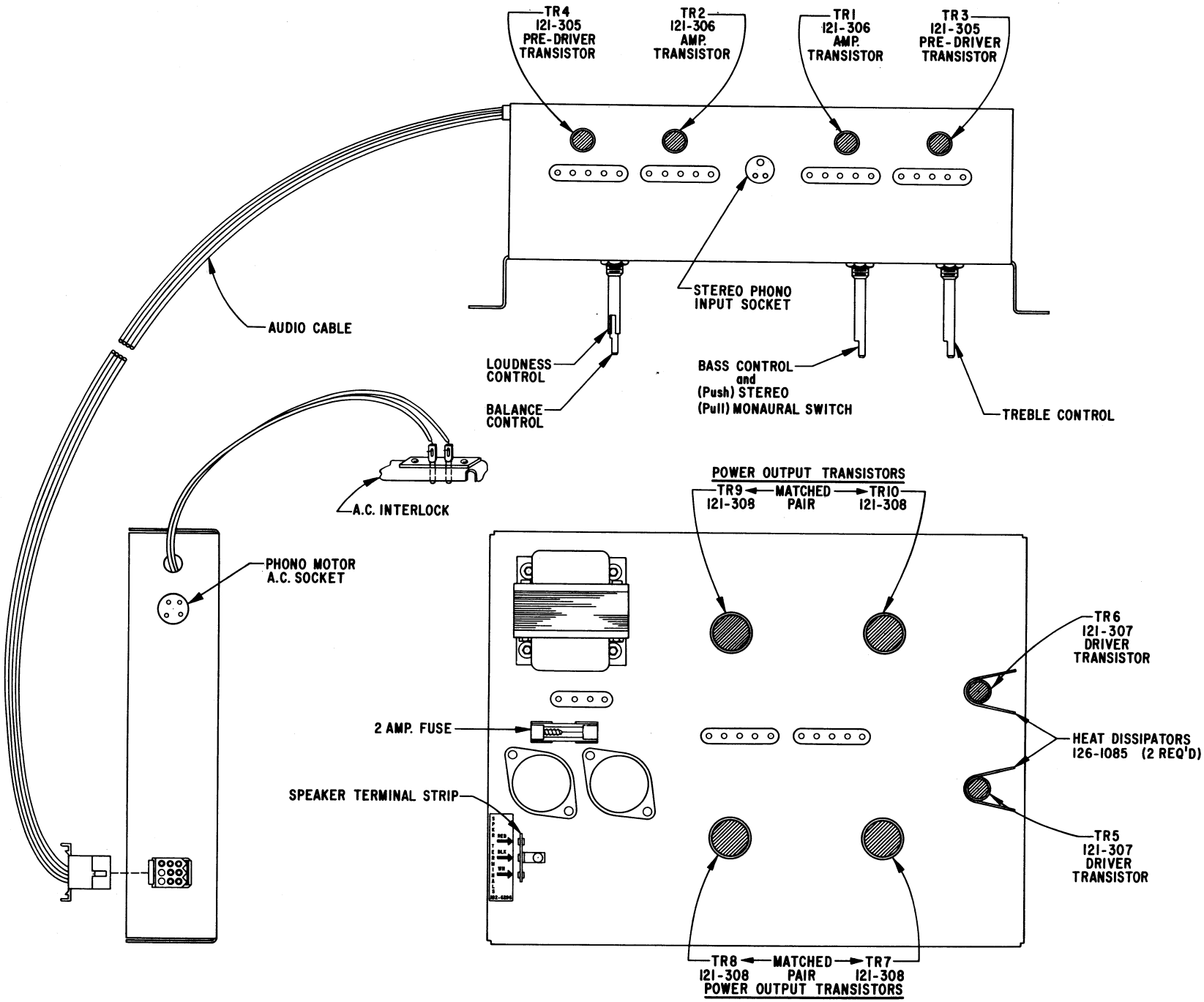

10MT26 TRANSISTOR LAYOUT FOR MODELS MM2608, MM2610, MM2640 & MM2650

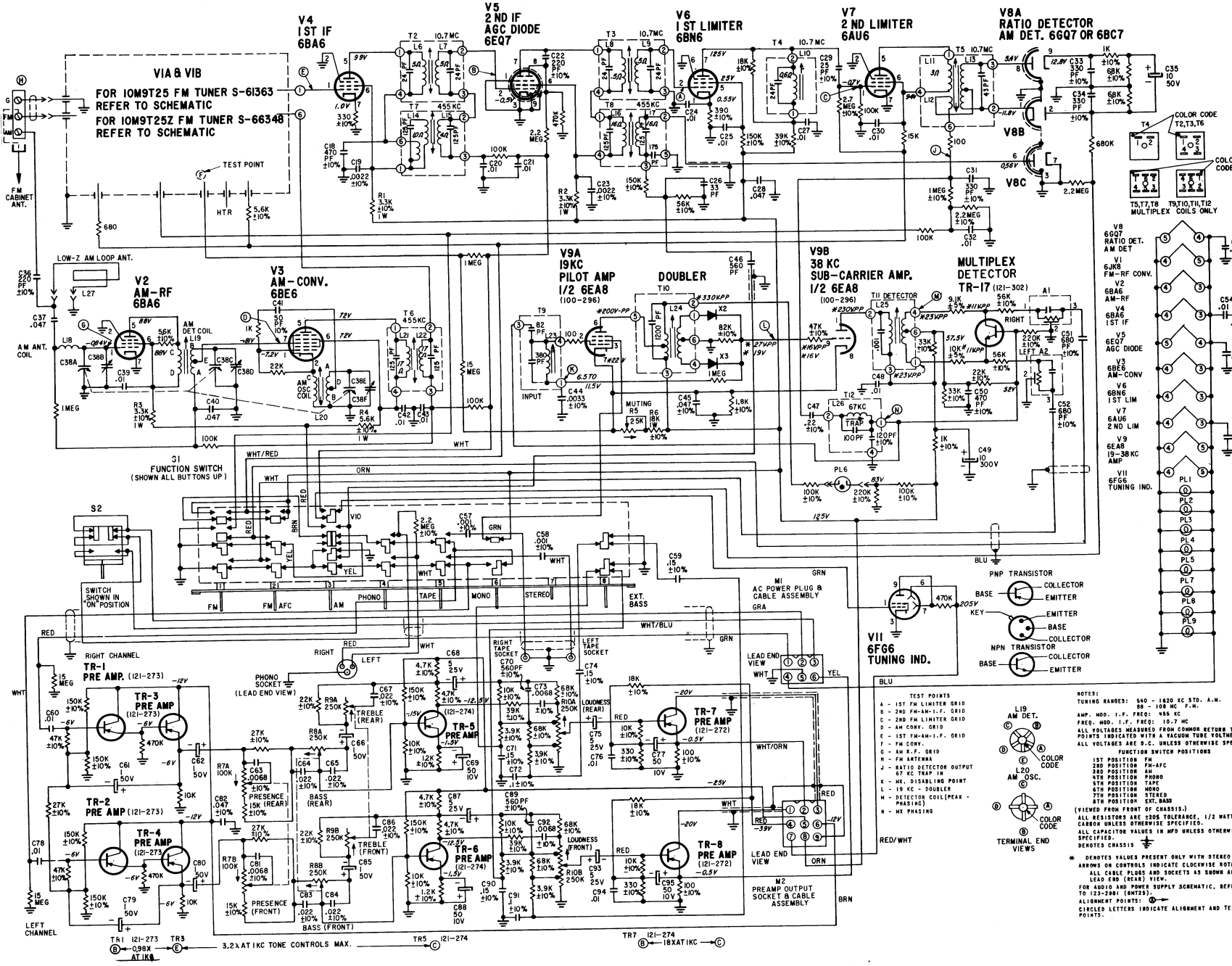

10M9T25 & 10M9T25Z SCHEMATIC FOR MODELS MM2670, MM2675, MM2685 & 7600-6

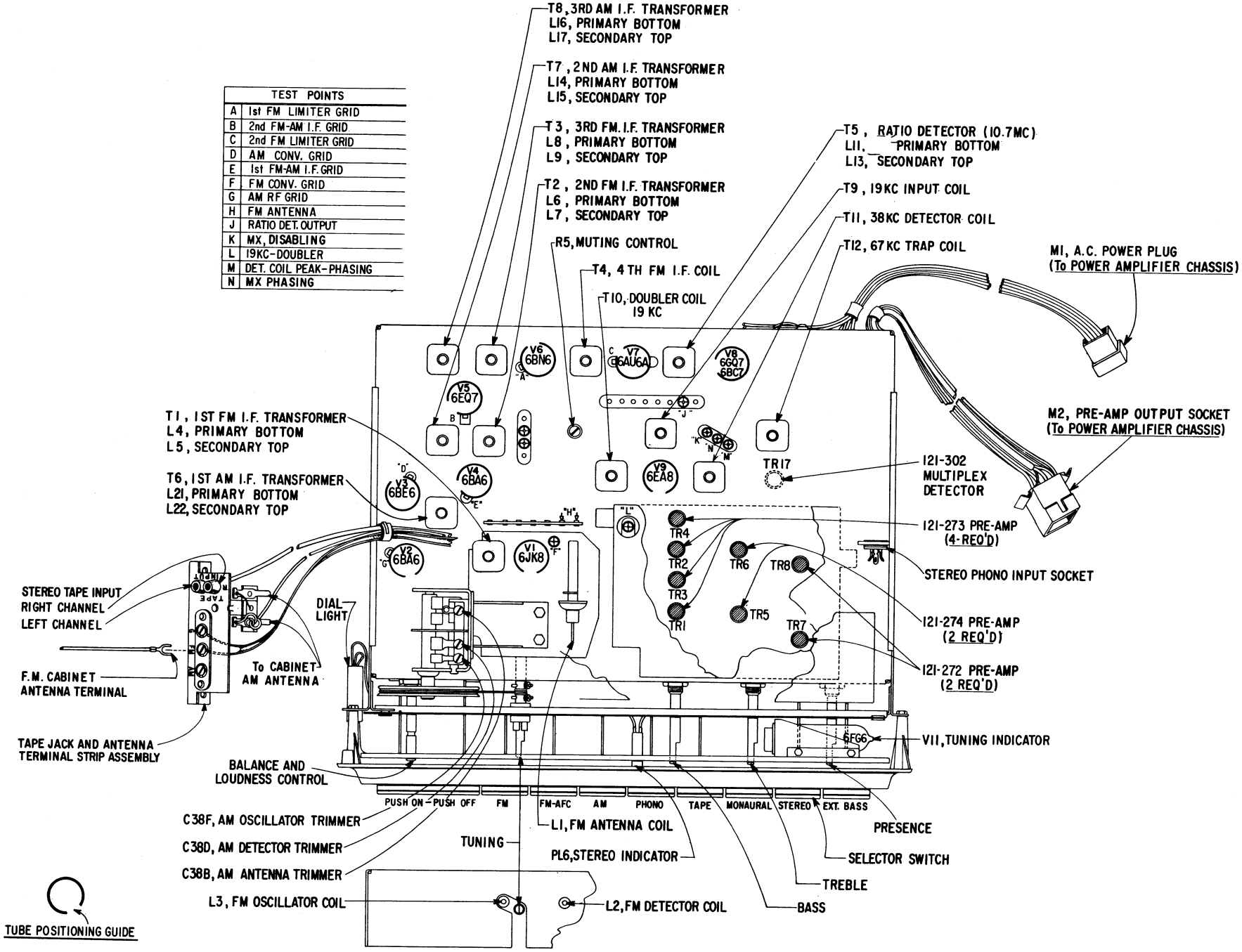

TEST POINTS	
A	1st FM LIMITER GRID
B	2nd FM-AM I.F. GRID
C	2nd FM LIMITER GRID
D	AM CONV. GRID
E	1st FM-AM I.F. GRID
F	FM CONV. GRID
G	AM RF GRID
H	FM ANTENNA
J	RATIO DET. OUTPUT
K	MX, DISABLING
L	19KC-DOUBLER
M	DET. COIL PEAK-PHASING
N	MX PHASING

10M9T25 & 10M9T25Z TUBE & TRANSISTOR LAYOUT FOR MODELS MM2670, MM2675, MM2685 & 7500-6

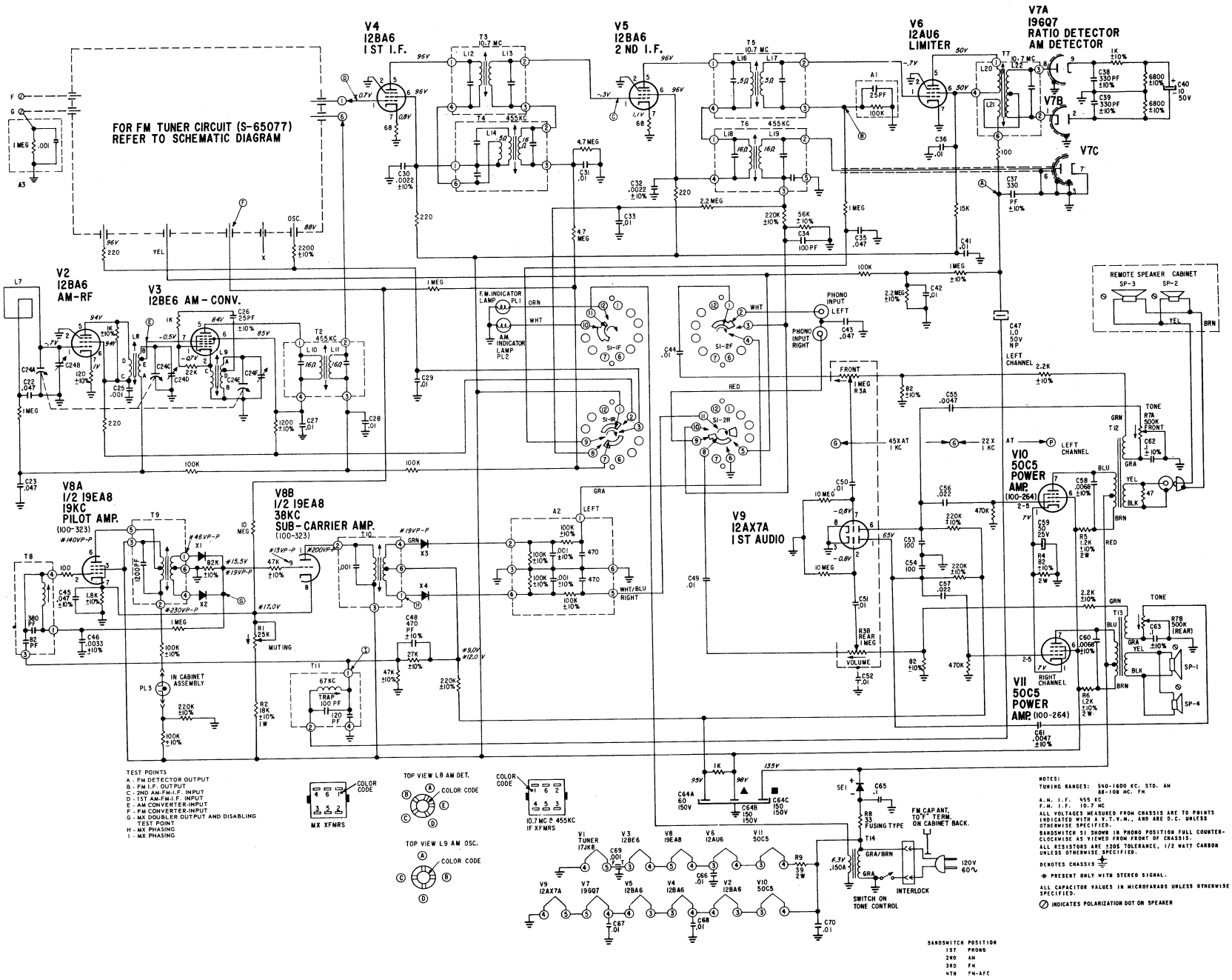

11J01 SCHEMATIC FOR MODEL MJ1035-1

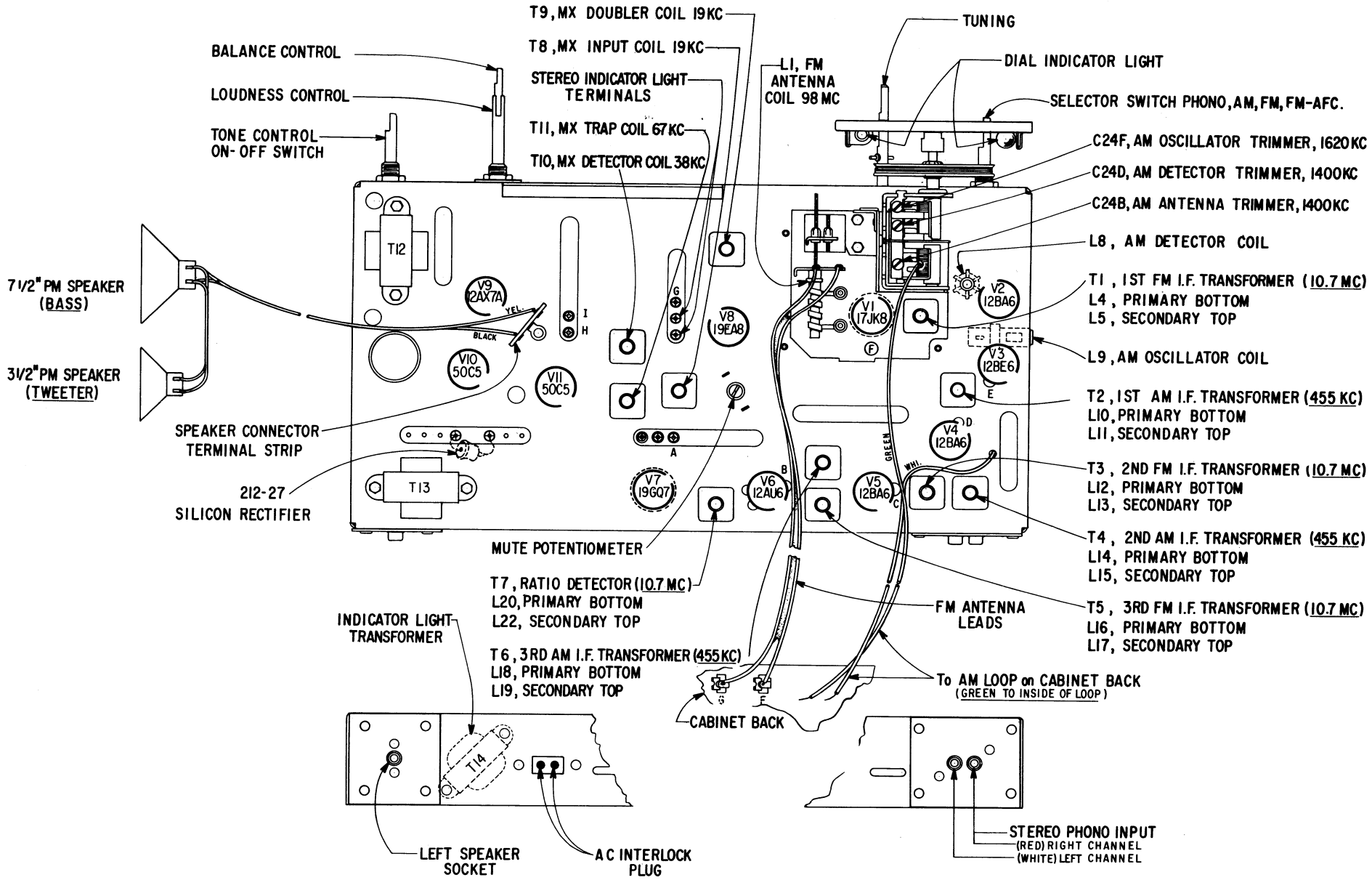

11J01 TUBE LAYOUT FOR MODEL MJ1035-1

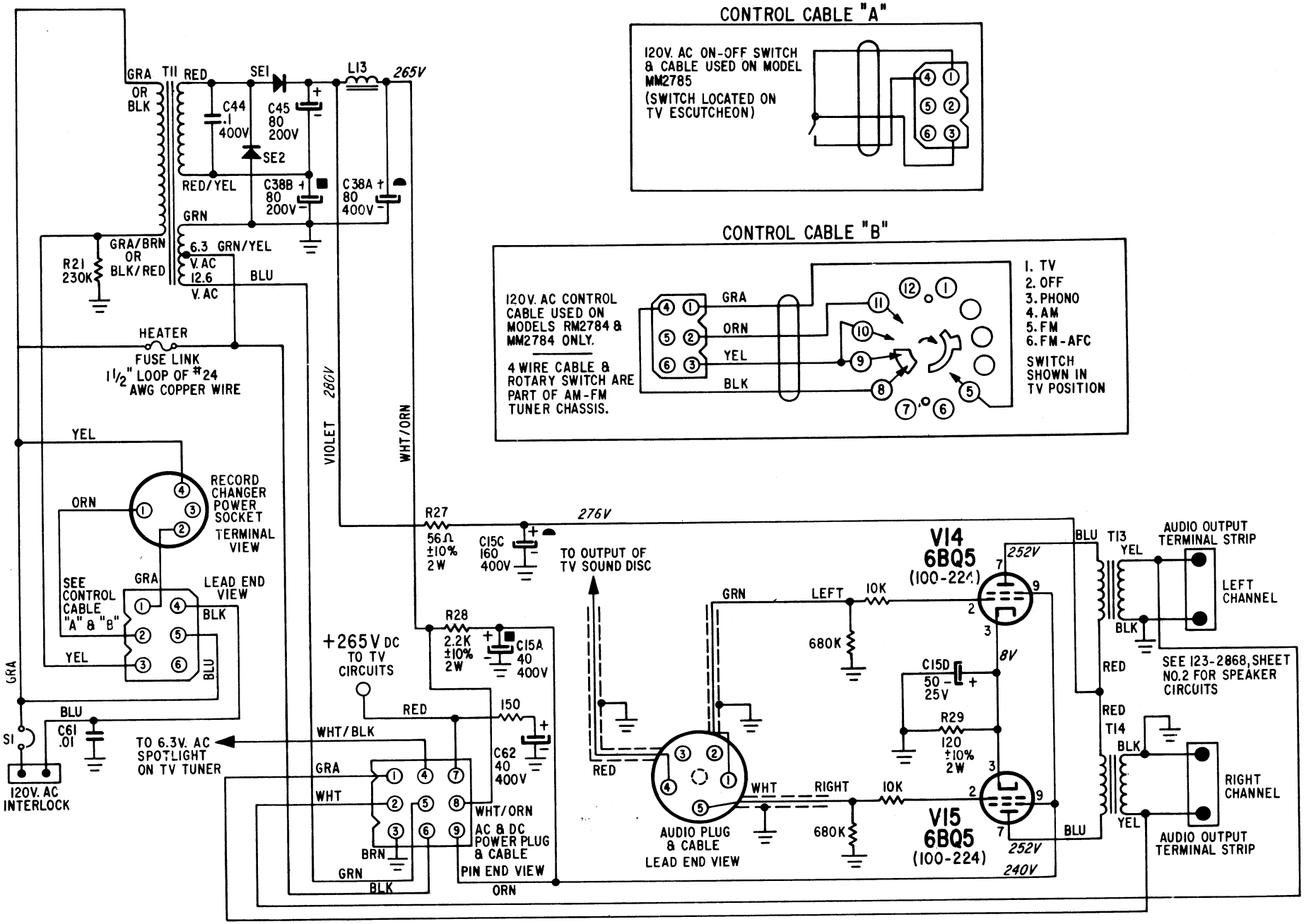

AUDIO, POWER & SWITCHING SECTIONS OF 16M24

SPEAKER HOOKUP FOR
MODELS RM2784 MM2784

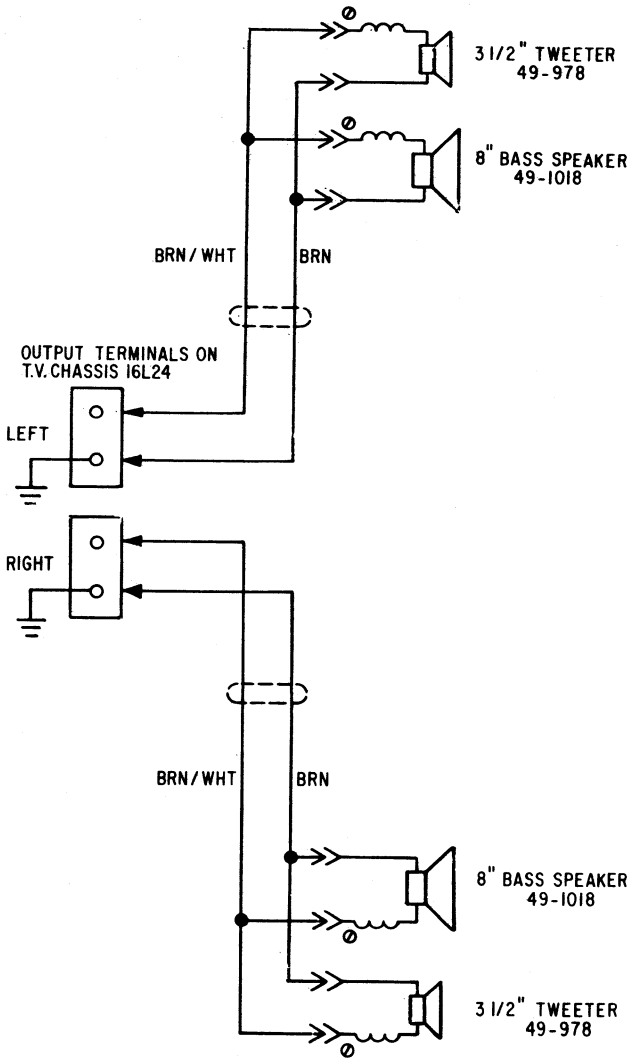

SPEAKER HOOKUP FOR
MODEL MM2785
S-64723 SPEAKER CABLE ASSEMBLY

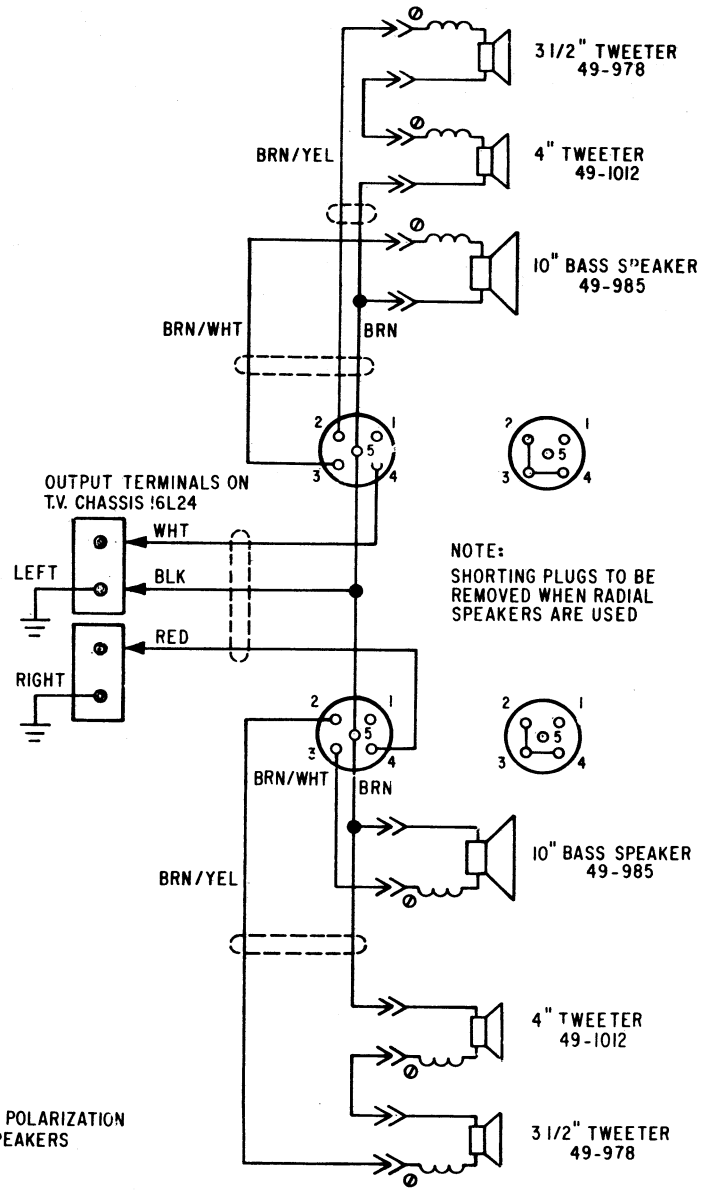

NOTE: ⊘ INDICATES POLARIZATION
DOT ON SPEAKERS

SPEAKER SCHEMATIC FOR MODELS RM2784, MM2784 & MM2785

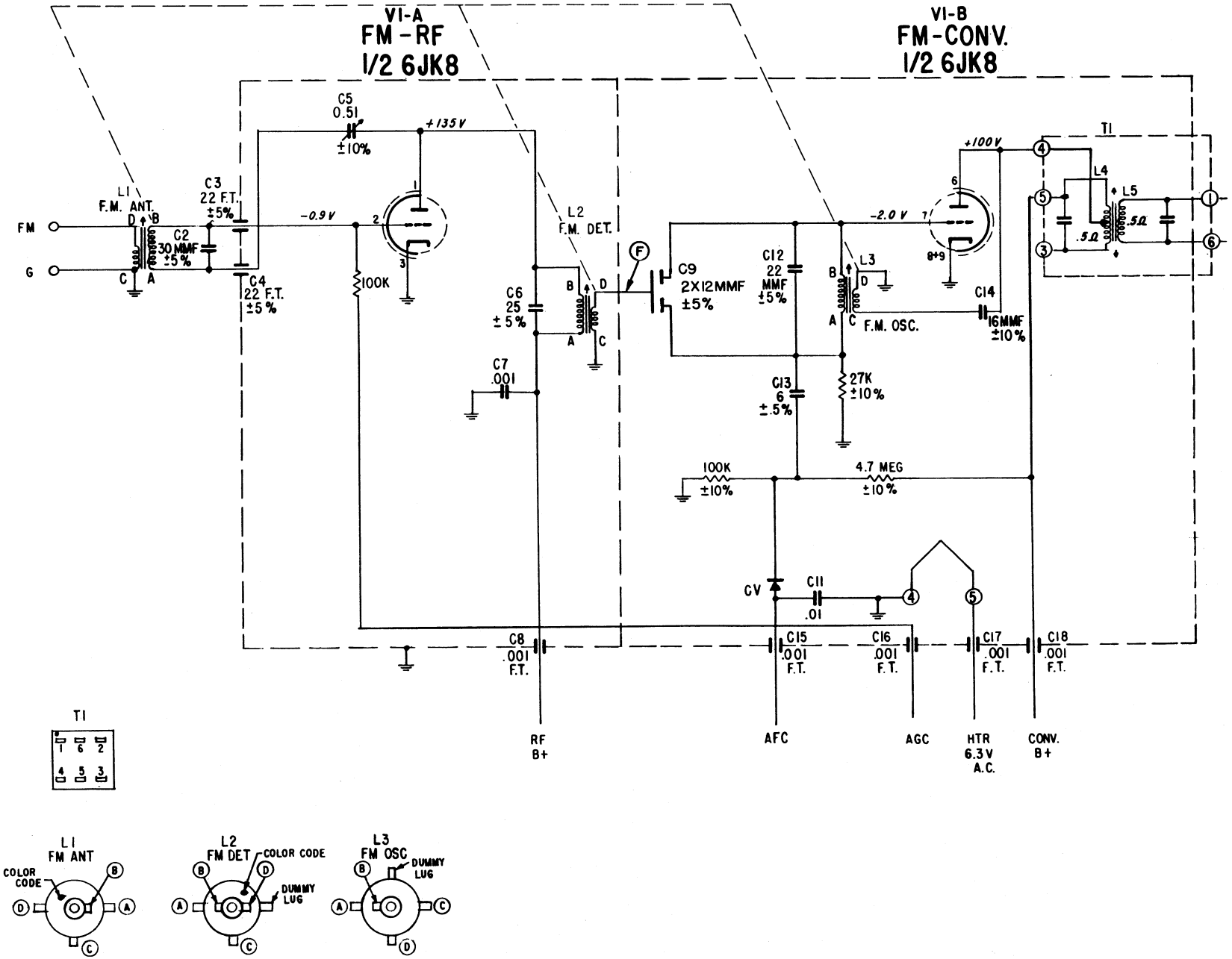

SCHEMATIC FOR FM TUNERS S-61017, S-64706 & S-61363 USED ON CHASSIS 9M1T23, 9M1T22 & 10M9T25

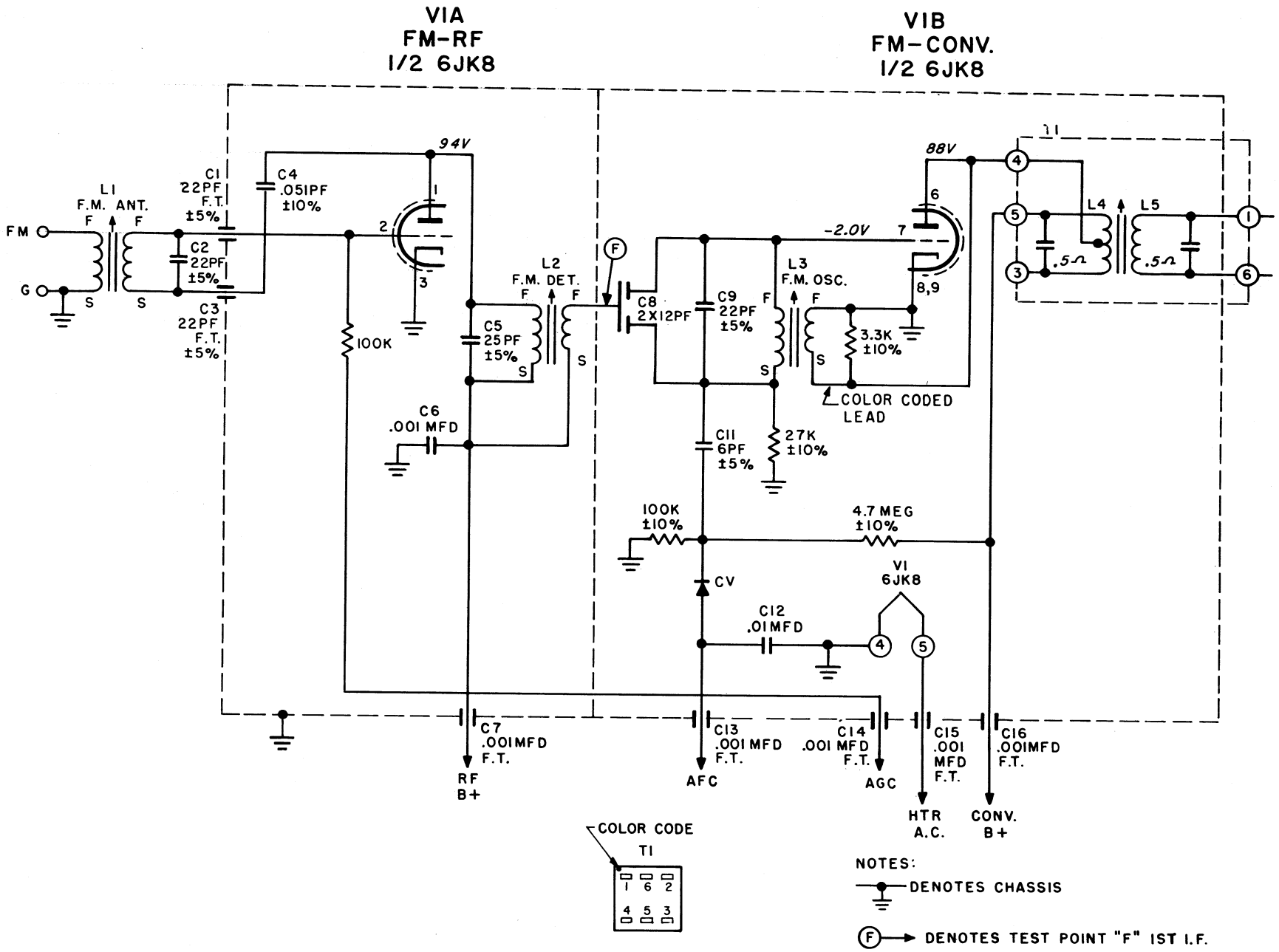

SCHEMATIC FOR FM TUNERS S-66346, S-66347 & S-66348 USED ON CHASSIS 8L1T20Z, 9M1T22Z, 9M1T23Z & 10M9T25Z

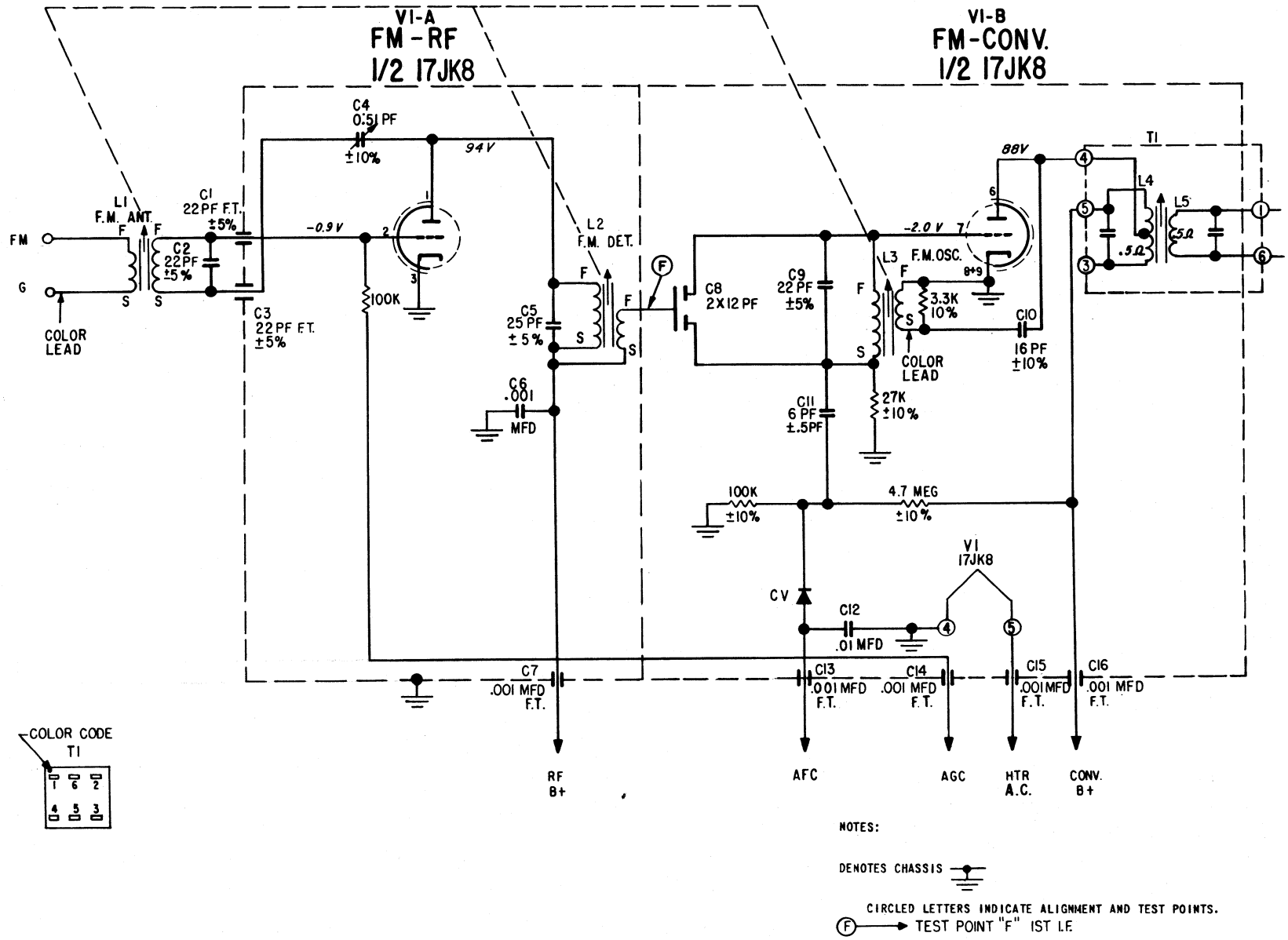

NOTES:

DENOTES CHASSIS

CIRCLED LETTERS INDICATE ALIGNMENT AND TEST POINTS.

(F) → TEST POINT "F" IST I.F.

SCHEMATIC FOR FM TUNER S-65077 USED ON CHASSIS 11J01

SHOWN IN FIRST POSITION
1ST-OFF
2ND-RADIAL SPEAKER (only)
3RD-MASTER & RADIAL SPEAKER

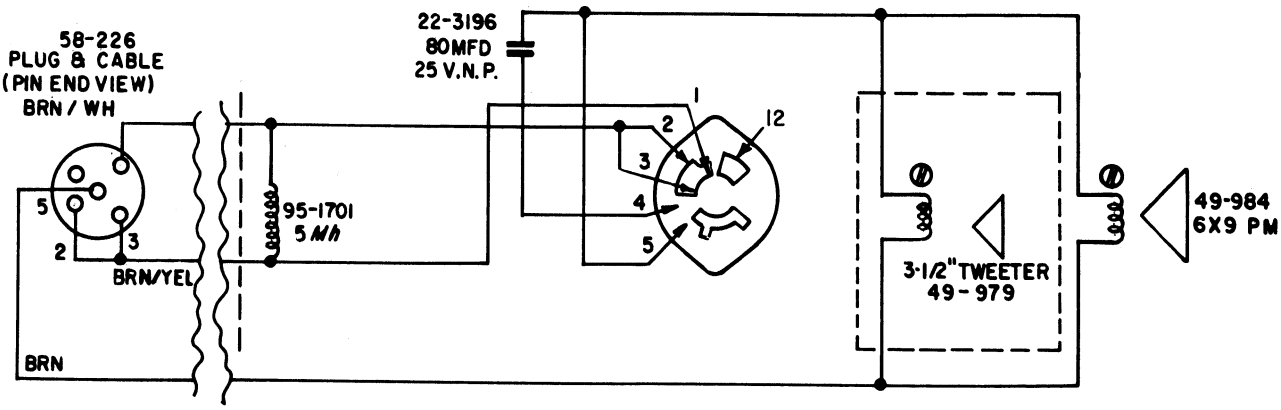

⊘ INDICATES POSITIVE POLARITY OF SPEAKER.
(YELLOW OR WHITE)

SCHEMATIC MR102

SHOWN IN FIRST POSITION
1ST —OFF
2ND— RADIAL SPEAKER (ONLY)
3RD MASTER & RADIAL SPEAKER

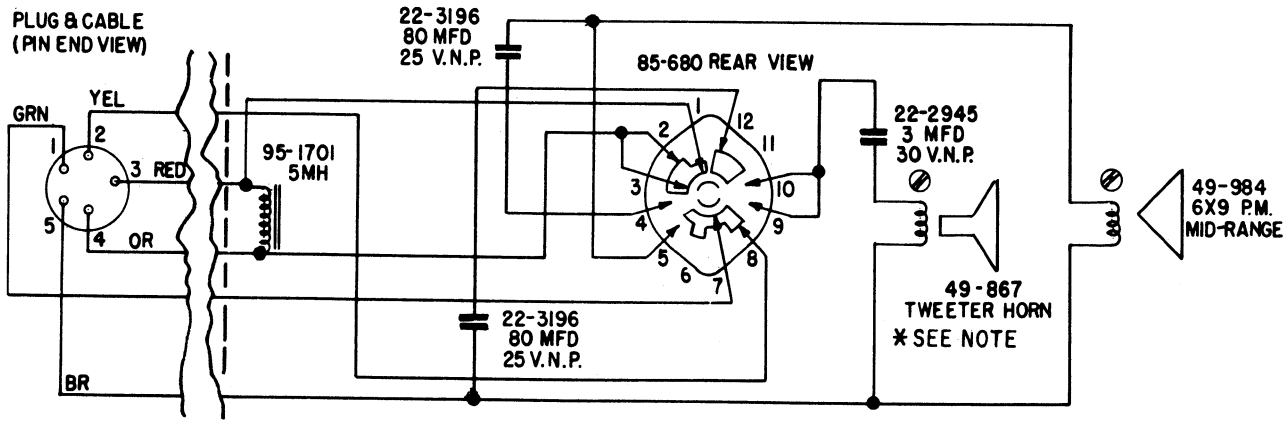

* NOTE: KR105 USES TWEETER HORN 49-867 AND MR105 USES TWEETER HORN 49-1042.

⊘ INDICATES POS. POLARITY OF SPEAKER
(YELLOW OR WHITE)

SCHEMATIC MR105

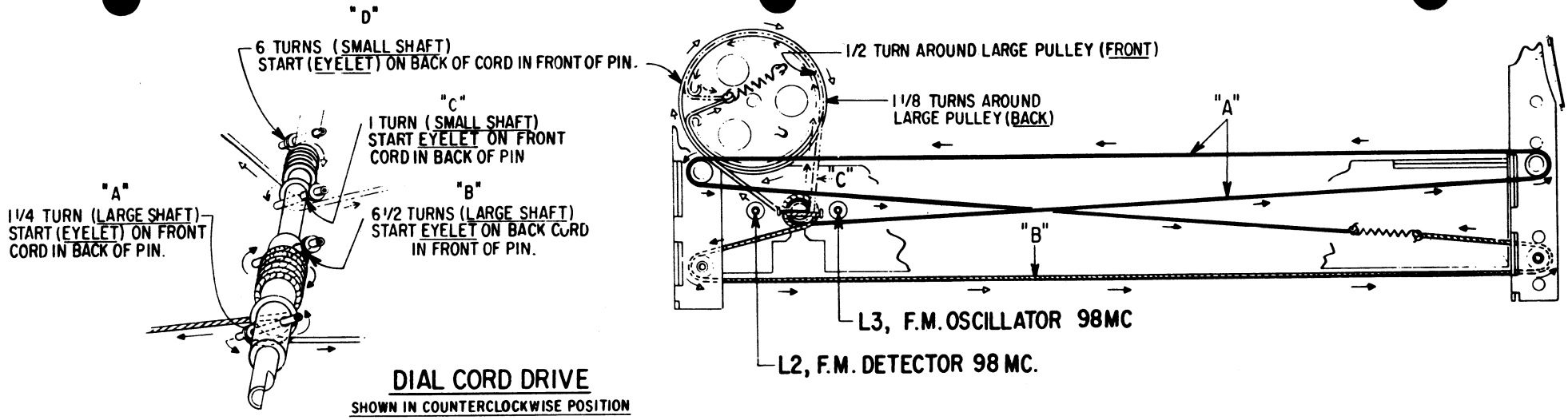

DIAL CORD DRIVE FOR CHASSIS 6L01 AND 7L01

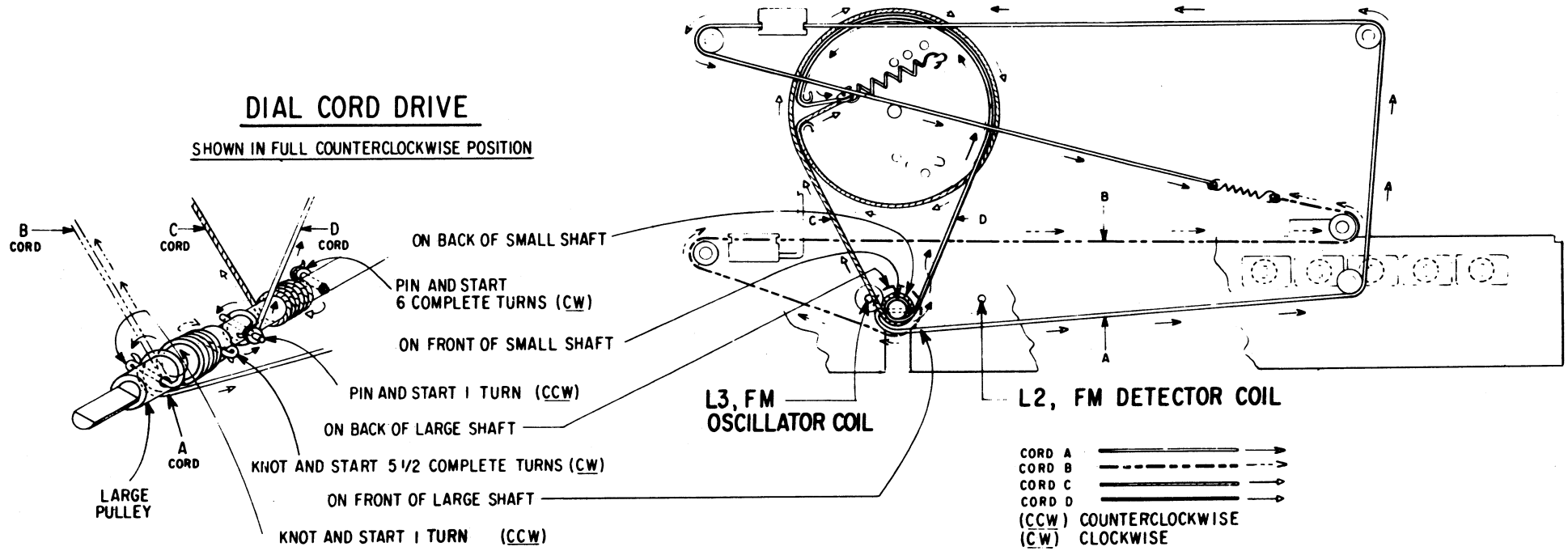

DIAL CORD DRIVE FOR CHASSIS 8L1T20Z

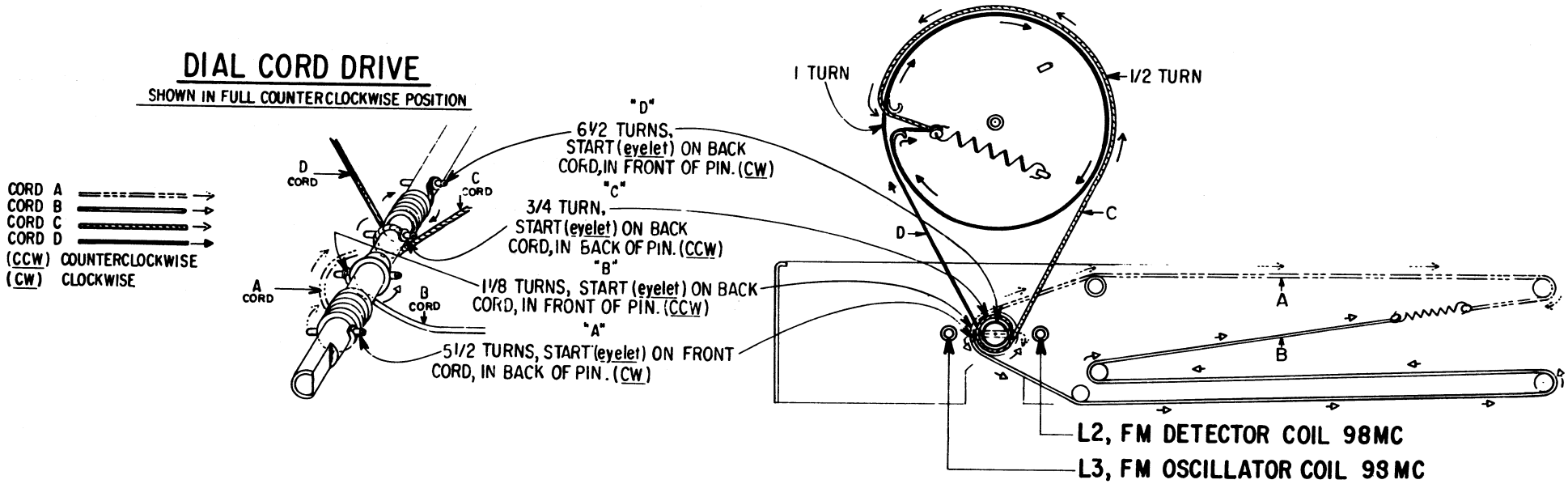

DIAL CORD DRIVE FOR CHASSIS 7L22, 9M1T22, & 9M1T22Z

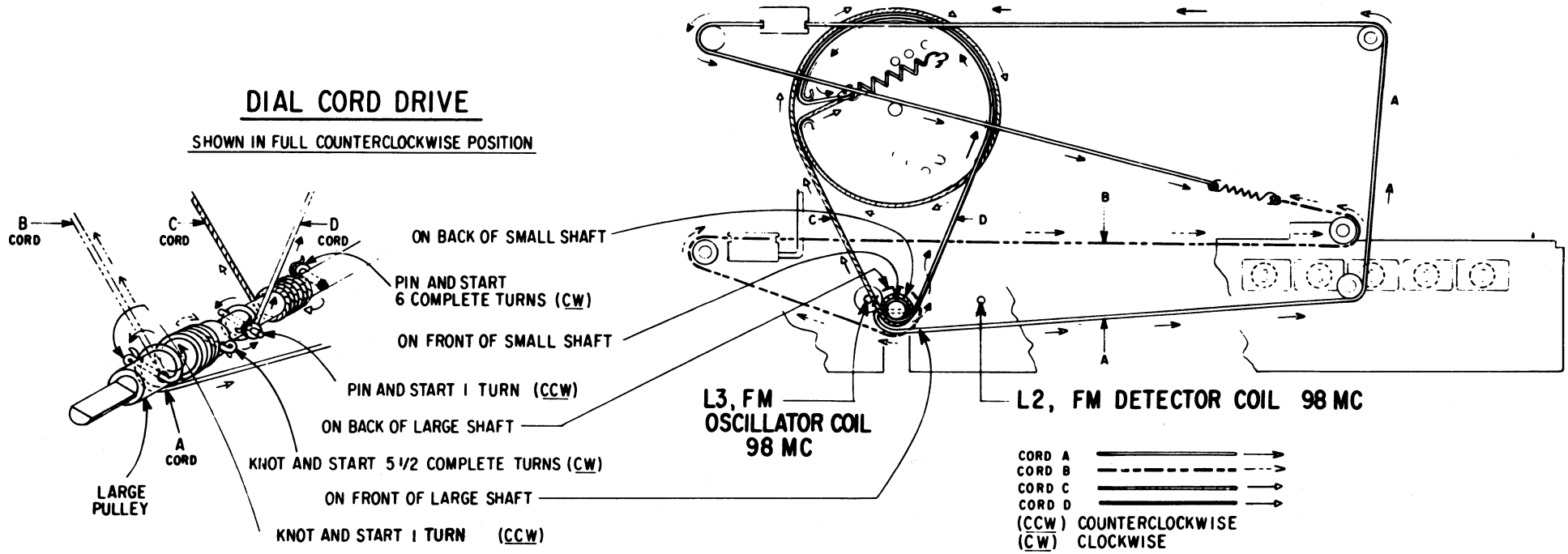

DIAL CORD DRIVE FOR CHASSIS 9M1TZ3 & 9M1TZ3Z

DIAL CORD DRIVE

SHOWN IN FULL COUNTERCLOCKWISE POSITION

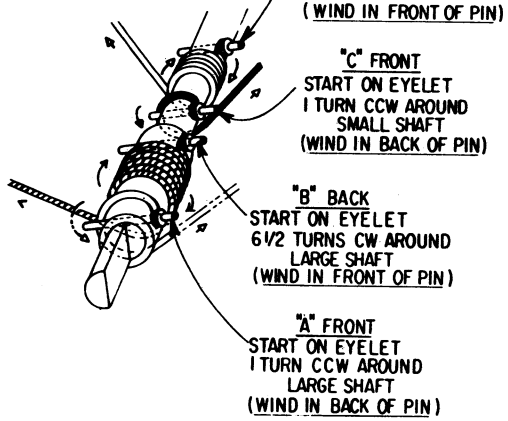

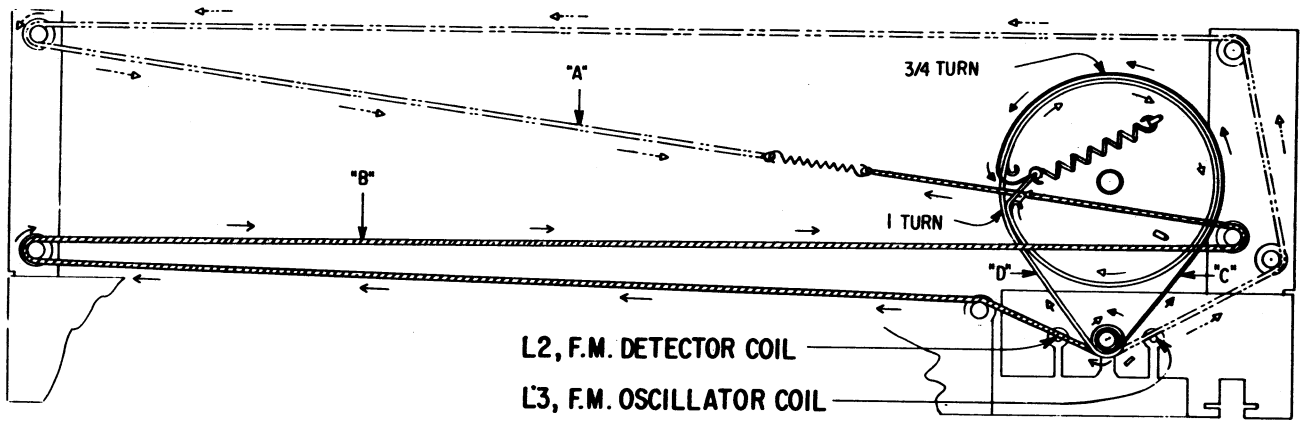

DIAL CORD DRIVE FOR CHASSIS 10L02Z

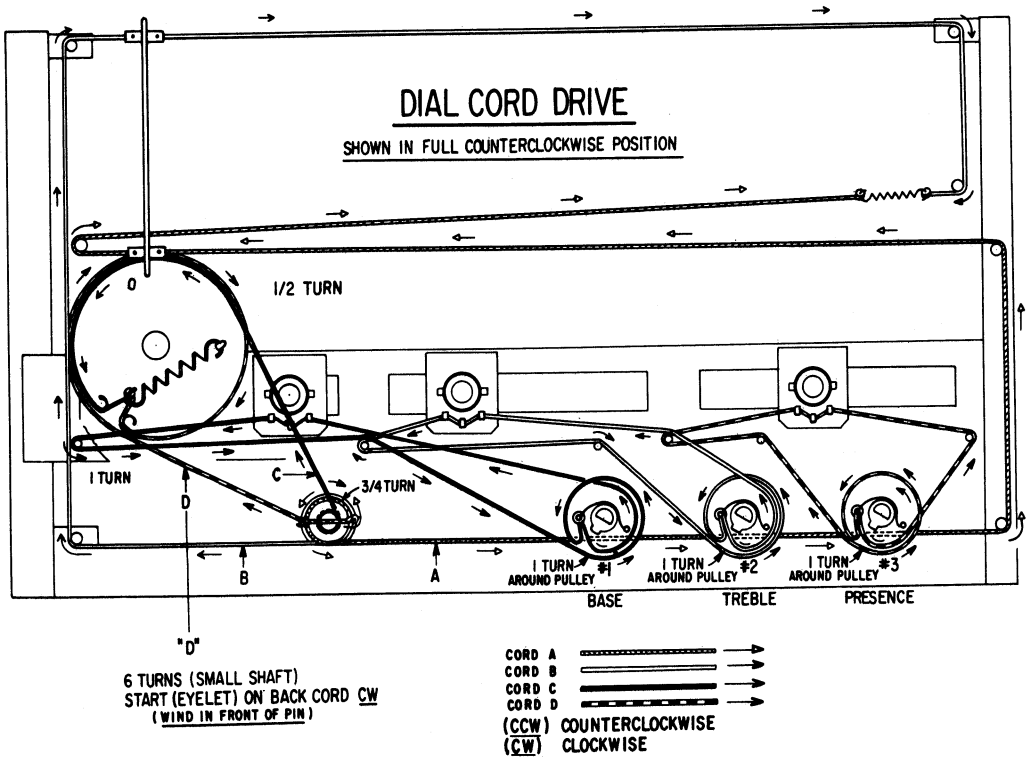

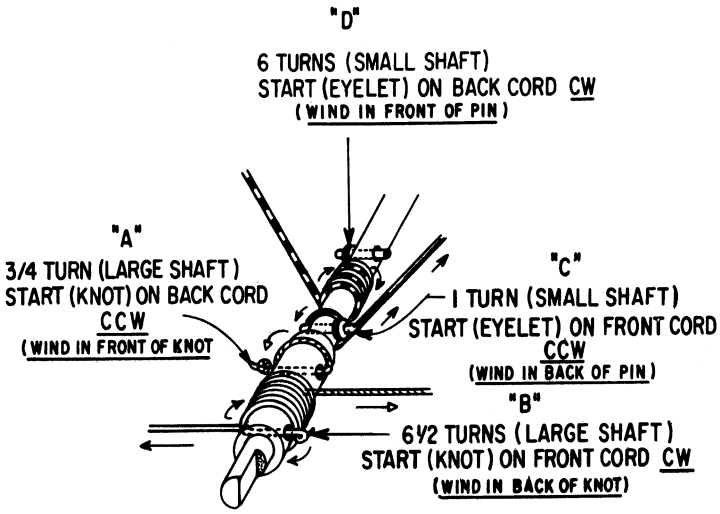

DIAL CORD DRIVE FOR CHASSIS 10M9T25 AND 10M9T25Z

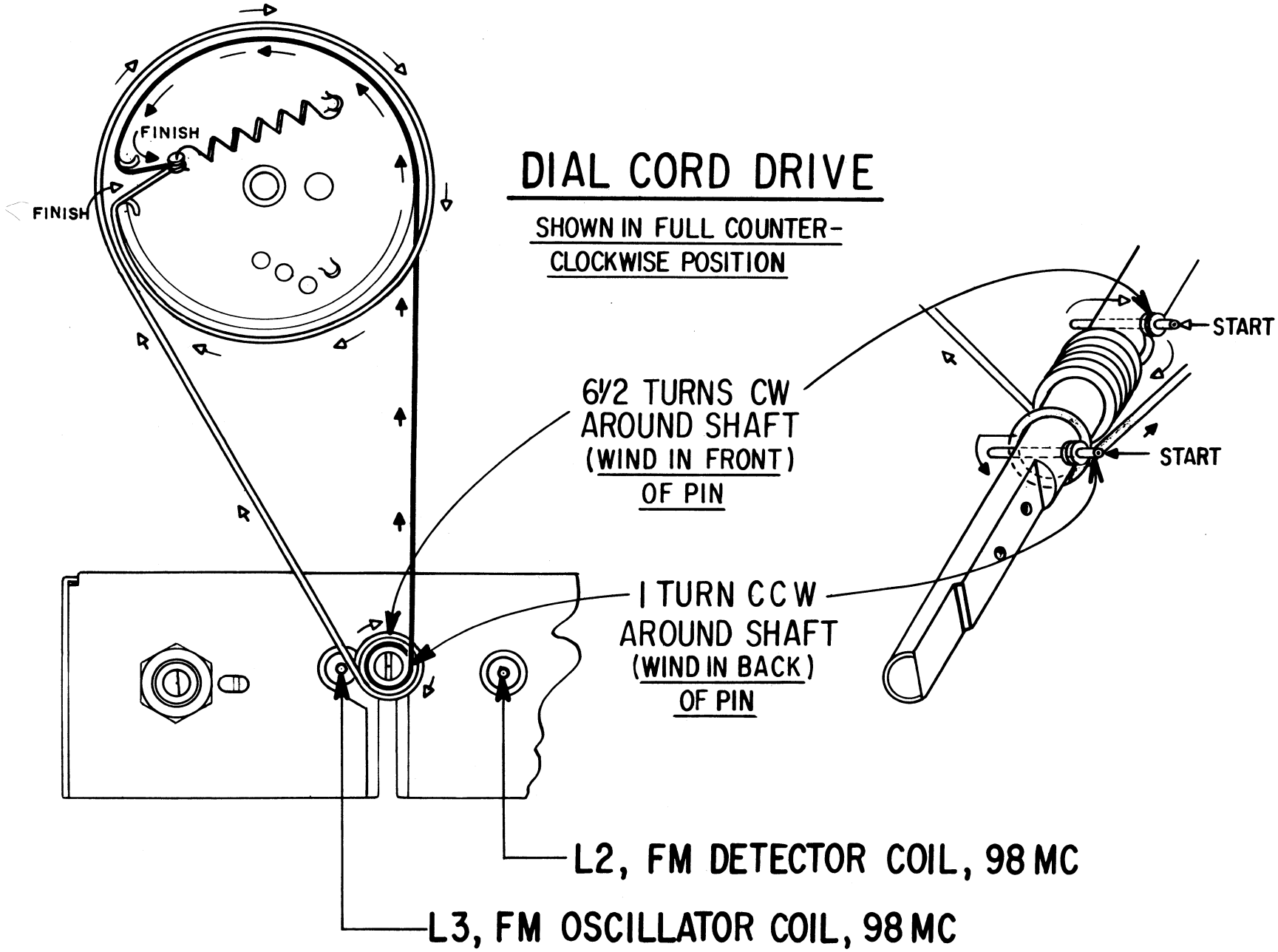

DIAL CORD DRIVE FOR CHASSIS 11J01

PARTS LIST

MODEL MP10C & L

PART NO.	DESCRIPTION	PRICE
17883	Case Assembly w/Hardware & Motorboard	
17893	Replacement Grille Cloth	
17896	Edging RM-861 #809 Silver 5-5/16" length	
17895	Moulding RM-803 #633½ Silver 13-13/16" length	
14195-9	Bumper Paragon Black	
16697-A	Vent Plate	
14902-A	Eyelet	
16580	Eyelet	
16467	Tee Nut ¼-20 x 5/16	
16654	Bushing	
16579	Lockwasher	
17798	Machine Screw ¼-20 7/8" long	
17187-9A	Handle Assembly Black	
17794	Cord Partition	
12599	Potentiometer 50K	
12920	Rectifier	
17800	Potentiometer 2 meg.	
17801	Transformer, output	
17803	Capacitor 40, 20, 20	
RM-5572	Carton w/fillers	
11792	Speaker 4"	
15432-9C	Knob Assembly w/clip	
17445	Clamp	
202-2537	Instruction Book	
17577	Plastic Eyelet	
169-236	Record Changer (on C)	
142-146	Dual Pickup Cartridge	
169-238	Record Changer (on L)	

MPS40C & L

PART NO.	DESCRIPTION	PRICE
17776	Case Assembly w/Hardware & Motorboard	
17889	Replacement Grille Cloth Master	
17890	Replacement Grille Cloth Remote	
17896	Edging RM-861 #809 Silver 5-5/16" length	
17895	Moulding RM-803 #633½ 13-13/16" length	
14158-A	Catch Nickel plated	
14195-9	Bumper Black	
16580	Eyelet	
16697-A	Vent Plate Nickel plated	
14902-A	Eyelet Nickel plated	
14184-A	Eyelet Nickel plated	
14183-A	Stud Nickel plated	
16467	Tee Nut	
16654	Bushing	
16579	Lockwasher	
17798	Machine Screw	
17778	Control Plate	
16450-A	Hinge	
17187-9A	Handle Assembly	
17309-9	Bumper Black	
17793	Cord Partition (PWR)	
17794	Cord Partition	
12400	Potentiometer 2 meg.	
13650	Potentiometer 50K stacked	
13667	Resistor 2.2K 1 W	
13762	Resistor 115 ohm 5 W 10%	
14027	Rectifier	
14132	Fusing Resistor 47 ohm	
964-17183	Transformer, output	39.96/C
17799	Capacitor 150, 20, 20	73.00/C
RM-5566	Carton w/fillers	1.41 ea.
10901	Speaker 5¼" 49-751	1.12 ea
13554	Recessed Nut	3.53/C
15432-9C	Knob Assembly w/clip	6.62/C
17179-5	Remote Speaker Cable 12'	12.39/C
17364	Cable Clamp	2.07/C
17577	Plastic Eyelet	4.20/C
202-2538	Instruction Book	10.00/C
169-237	Record player (on C)	
169/239	Record player (on L)	

SA49C CHASSIS

PART NO.	DESCRIPTION	PRICE
22-1843	Capacitor .01 Mfd. 600 V (2 req'd.)	.30
22-2245	Capacitor .068 Mfd. 600V (2 req'd.)	.45
22-2795	Capacitor .047 Mfd. 200V	.25
63-1863	Resistor 68K Ohm ½W 20%	.17
63-2284	Resistor 150 Ohm 1 W 20%	.25
63-2767	Resistor 115 Ohm 5 W 10%	.75
63-3633	Resistor 4700 Ohm ½W 10%	.17
63-4606	Resistor 680K Ohm ½W 20% (2 required)	.17
63-4738	Resistor 2200 Ohm 1 W 20%	.25
WC-12400	Volume Control - 2 Meg. (2 req'd.)	1.40
WC-13650	Tone Control (50K)	2.35
WC-14027	Selenium Rectifier	3.80
WC-14132	Fusing Resistor - 47 Ohm	.50
WC-14869	Electrolytic 150/150 20/150 20/150	3.75
WC-17183	Output Transformer (2 required)	2.00

SA49C CABINET PARTS

PART NO.	DESCRIPTION	PRICE
WC-11383	Tee Nut (2 part of WC-17301)	.10
WC-13554	Recessed Nut (1 mounts each WC-12400 & WC-13650)	.15
WC-14195-9	Bumper (5 required)	.35
WC-15432-9C	Knob Assembly with clip (3 required)	.40
WC-15881	5¼" Speaker (2 required)	6.50
WC-16374-A	Hole Button	.20
WC-16380	Machine Screw (2 part of WC-17301)	.10
WC-16579	Lockwasher (2 part of WC-17301)	
WC-16580	Eyelet (2 part of WC-17301)	.10
WC-16654	Hinge Bushing (2 part of WC-17301)	.30
WC-17179-5	Remote Cord	.75
WC-17187-9	Handle Assembly	
WC-17273	Remote Rear Cover	
WC-17274	Master Rear Cover	1.50
WC-17301	Case Assembly with Hardware and Motorboard	
WC-17302	Control Panel	1.00
WC-17304-9	Bullet Catch (2 required)	
WC-17305-9	Strike (2 required)	.20
WC-17310-9	Bumper (2 required)	.30
WC-17427	Master Grille Cloth (2 required)	
WC-17428	Remote Grille Cloth	
WC-17453	Remote Speaker Cabinet less Speaker	
56-441-B	Needle Assembly - 3 Mil Mfg. Sapphire Tip (part of 142-113-B)	2.00
56-442-B	Needle Assembly - .7 Mil Mfg. Sapphire Tip (part of 142-113-B)	2.00
57-3259	Name Plate (part of WC-17301)	.75
102-9796	Tube Layout & Patent Label	
142-113-B	Stereo Cartridge & Needles	7.00
169-229	Record Changer (See Record Changer parts list for components)	
202-2473	Instruction Book	

LPS70-1 CHASSIS

PART NO.	DESCRIPTION	PRICE
22-1814	.0022 Mfd. Molded Capacitor - 600V (2 required)	.30
22-1843	.01 Mfd. Capacitor - 600V (2 req'd)	.30
22-2586	.0015 Mfd. Capacitor - 600V (2 required)	.25
22-2634	.047 Mfd. Capacitor - 400V (2 required)	.30
22-2766	47 Mmf. Capacitor - 600V (2 req'd.)	.70
63-1771	470 Ohm Resistor ½W 10% (2 required)	.17
63-1883	220K Ohm Resistor ½W 10% (2 required)	.17
63-2808	68 Ohm Resistor 2W 20%	.34
63-3992	68K Ohm Resistor ½W 10% (2 req'd)	.17
63-4019	39K Ohm Resistor ½W 10% (2 req'd)	.17
63-4482	100K Ohm Resistor ½W 10% (2 required)	.17
63-4738	2200 Ohm Resistor 1W 10%	.25
WC-12877	33 Ohm Resistor 1W 10%	.25
WC-13229	Bass Control (5 Megohm)	2.50
WC-13501	Balance Control (1 Megohm)	1.40
WC-13800	Treble Control (500K Ohm)	2.75
WC-14027	Silicon Rectifier	3.80
WC-15730	Loudness Control	3.50
WC-16435	Electrolytic 150/150 40/150 20/15	3.50
WC-16825	Fusing Type Resistor (95 Ohm 3W)	.50
WC-17270	Output Transformer	3.25

LPS70C1 CABINET PARTS

PART NO.	DESCRIPTION	PRICE
WC-11792	4" PM Speaker (2 required)	5.00
WC-12963	6" PM Speaker (2 required)	8.00
WC-13004-A	Catch-Remote Speaker	.75
WC-14183-A	Stud-Remote Speaker	.25
WC-14184-A	Eyelet-Locater (Stud)	.20
WC-14195	Lower Door Bumper	.35
WC-14289	8-32 x 7/8 Bolt (2 mount WC-16438-P)	.05
WC-14500	Eyelet	.10
WC-14648-8C	Knob Assembly (Bass-Treble-Volume) (3 required)	.75
WC-14649-8C	Knob Assembly (Balance)	.85
WC-15057	Recessed Nut (1 mounts each control)	.15
WC-15090-X	Logo (Name) Plate	1.00
WC-15101-9	Support Bumper - Main Cabinet (4 required)	.25
WC-15105-9	Support Bumper - Remote Cabinet (4 required)	.25
WC-15484-A	Eyelet (part of WC-16436-L)	.05
WC-15821	Cable Clamp (3 required)	.05
WC-16226	Lockwasher (1 used on each WC-16380)	.03
WC-16374-C	Hole Button	.25
WC-16380	Hinge Bolt (2 required)	.10
WC-16387	Upper Door Bumper (2 required)	.25
WC-16429	Control Panel	1.25
WC-16436-L	Rear Panel (Remote Cabinet)	2.00
WC-16436-R	Rear Panel (Main Cabinet)	2.00
WC-16438-P	Drawer Handle	1.25

PART NO.	DESCRIPTION	PRICE
WC-16450-A	Hinge-Remote Speaker (2 req'd.)	.45
WC-16451-9A	Cabinet Handle Assembly	1.50
WC-16458	Audio Cable - Input	1.50
WC-16467	Tee Nut (2 required)	.20
WC-16534-A	Handle Hardware Cap (part of WC-16451-9A)	.50
WC-16535	Trim Strip 30" Length (part of cabinet)	.75
WC-16539	Grille Cloth - Master Cabinet	.50
WC-16540	Grille Cloth - Remote Cabinet	.60
WC-16580	Eyelet - Hinge (2 required)	.10
WC-17179-5	External Remote Speaker Cord	.75
WC-17404	Case Assembly with Hardware & Motorboard	
19-414	Line Cord Clip (2 used on WC-16436-R)	.10
102-9738	Tube Layout & Patent Label	
142-142	Dual Pickup Cartridge (Sapphire-Sapphire)	
169-234	Record Changer (See record changer parts list for components)	
202-2421	Instruction Book	
S-62648	Dual Stylus Assembly (.7 Mil Sapphire & 3 Mil Sapphire) (part of 142-142)	3.50

CHASSIS 8LIT20Z

12-3249	Variable Capacitor Mounting Bracket	.05
12-3892	Escutcheon Mounting Bracket (R.H.)	
19-306	Coil Mounting Clip (2 required)	.10
19-440	Dial Crystal Retaining Clip (2 required)	.10
19-446	Dial Scale Retaining Clip	.03
22-3	.01 Mfd. Disc Capacitor 500V (10 required)	.30
22-5	100 PF Disc Capacitor 500V	.25
22-7	.001 MF Disc Capacitor 500V	.25
22-13	.0033 MF Disc Capacitor 500V	.25
22-17	.001 MF Disc Capacitor 500V	.25
22-18	.0022 MF Disc Capacitor 500V (5 required)	.25
22-2370	50 PF Disc Capacitor 500V	.25
22-2655	.01 MF Disc Capacitor 1400V	.50
22-3255	330 PF Disc Capacitor 500V	.25
22-3441	.22 Mfd. Capacitor 100V	.45
22-3537	.047 MF Capacitor 200V (3 req'd.)	.30
22-3618	10 MF Electrolytic Capacitor 50V	1.25
22-3636	Electrolytic Capacitor 150/150V 150/150V 60/150V	3.00
22-3862	Three Section Variable Capacitor	4.50
22-5015	.047 MF Capacitor - 200V	
46-3512	Push Button - AM	.35
46-3513	Push Button - FM	.35
46-3514	Push Button - AFC	.35
46-3515	Push Button - Phono	.35
46-3516	Push Button - Off	.35
52-978	Two Conductor Shielded Lead	.75
52-1098	Three Conductor Cable & Plug	.80
54-12	6-32 x 5/16 Hex Nut (mts. 212-23)	
54-504	Tinnerman Speed Nut (used on S-60934)	.03
54-541	Palnut (2 used on 19-440 and 4 used on 83-4535)	.03
54-549	Tinnerman Speed Nut (2 used on 192-319)	.03
57-3519	Antenna Mounting Plate	.10
57-4372	Dial Scale Background Plate	2.00
57-4373	Chassis Bottom Plate	1.00
57-4374	Trim Plate (part of S-64565)	1.50
58-238	Three Prong Plug (used on 52-978)	.10
59-547	Dial Pointer	.60
63-1736	68 Ohm Resistor ½W 10% (2 req'd.)	.17
63-1744	100 Ohm Resistor ½W 20% (2 req'd)	.17
63-1747	120 Ohm Resistor ½W 10%	.17
63-1758	220 Ohm Resistor ½W 20% (4 req'd)	.17
63-1785	1K Ohm Resistor ½W 10% (2 req'd)	.17
63-1786	1K Ohm Resistor ½W 20% (2 req'd)	.17
63-1796	1800 Ohm Resistor ½W 10%	.17
63-1806	3300 Ohm Resistor ½W 10%	.17
63-1820	6800 Ohm Resistor ½W 10% (2 req'd)	.17
63-1825	9100 Ohm Resistor ½W 5%	.34
63-1826	10K Ohm Resistor ½W 5%	.34
63-1835	15K Ohm Resistor ½W 20%	.17
63-1841	22K Ohm Resistor ½W 10%	.17
63-1842	22K Ohm Resistor ½W 20%	.17
63-1848	33K Ohm Resistor ½W 10% (2 req'd)	.17
63-1856	47K Ohm Resistor ½W 20% (3 req'd)	.17
63-1859	56K Ohm Resistor ½W 10% (2 req'd)	.17
63-1866	82K Ohm Resistor ½W 10%	.17
63-1869	100K Ohm Resistor ½W 10% (2 req'd)	.17
63-1870	100K Ohm Resistor ½W 20% (3 req'd)	.17
63-1880	180K Ohm Resistor ½W 10%	.17
63-1883	220K Ohm Resistor ½W 10% (2 req'd)	.17
63-1890	330K Ohm Resistor ½W 10%	.17
63-1911	1 Megohm Resistor ½W 10%	.17
63-1912	1 Megohm Resistor ½W 20% (4 req'd)	.17
63-1925	2.2 Megohm Resistor ½W 10%	.17
63-1926	2.2 Megohm Resistor ½W 20%	.17
63-1940	4.7 Megohm Resistor ½W 20% (2 req'd)	.17

PART NO.	DESCRIPTION	PRICE
63-1954	10 Megohm Resistor ½W 20%	.17
63-4880	Potentiometer	1.40
63-4896	440 Ohm Resistor 3W 10%	.45
63-5193	22 Ohm Resistor - Fusing Type 4W 20%	.65
63-6091	3300 Ohm Resistor 1W 10%	.25
63-6122	18K Ohm Resistor 1W 10%	.25
68-39	Tuning Wrench	.50
71-139	8-32 x 3/8 Phillips Flat Hd Mach Screw (8 Mount 57-4373)	.03
78-402	Four Contact Socket	.15
78-1099	Three Contact Socket	.20
78-1311	Wafer Socket (12BA6)	.35
78-1333	Noval Wafer Socket (6GQ7)	.35
78-1360	Single Pilot Light Socket	.25
78-1560	Wafer Socket (12BA6) (2 req'd)	.35
78-1561	Wafer Socket (12AU6)	.35
78-1562	Noval Wafer Socket (6EA8)	.35
78-1564	Wafer Socket (12BE6)	.35
80-1140	Tension Spring (Pointer)	.10
80-1188	Tension Spring (Gang)	.10
83-1475	Insulating Strip	.03
83-1520	Rectifier Insulating Strip	.05
83-2123	Antenna Terminal Strip	.25
83-2538	Three Lug Terminal Strip	.10
83-2612	Two Lug Terminal Strip	.05
83-2639	Three Lug Terminal Strip	.05
83-3237	Five Lug Terminal Strip	.15
83-3561	Cable Retaining Strip	.05
83-3674	Seven Lug Terminal Strip	.20
83-3676	Four Lug Terminal Strip	.10
83-3902	Antenna Mounting Strip	
83-4530	Thirteen Lug Terminal Strip	.35
83-4533	Rubber Channel Strip - (Top & Bottom) (2 req'd)	.25
83-4534	Rubber Channel Strip - Sides (2 req'd)	.10
83-4535	Dial Crystal Retainer (2 req'd)	.50
83-4536	Channel Strip	
83-4543	Rubber Spacer (2 req'd)	.03
85-814	Push Button Bandswitch	
86-312	Wire Retaining Terminal	.03
86-328	Wire Retaining Terminal (2 req'd)	.03
86-344	Connector Terminal (2 req'd)	.03
86-388	Connector Terminal (2 part of S-60928)	.05
93-898	.032 x .323 x 5/8 Steel Washer	.03
93-1522	Spring Washer (used on S-60928)	.03
93-1580	1/32 x .171 x .296 Steel Washer	
94-1249	Shaft Bushing	
95-1915	1st I.F. Transformer - AM	2.50
95-1917	3rd I.F. Transformer - AM	2.50
95-1919	2nd and 3rd I.F. Transformer - FM (2 req'd)	2.50
95-1920	Ratio Detector Transformer	2.50
95-1924	2nd I.F. Transformer - AM	2.50

PART NO.	DESCRIPTION	PRICE
95-2073	Input Mixer Transformer	2.50
95-2076	Doubler Mixer Transformer	4.50
95-2077	Detector Mixer Transformer	3.00
95-2078	Trap Coil	2.50
95-2106	Power Transformer	10.00
100-249	Pilot Light Bulb - #1847	
100-275	Neon Bulb & Wire (part of S-60928)	
103-23	Crystal Diode (2 req'd)	.75
105-42	R/C Network	.50
105-50	R/C Network (2 req'd)	.90
113-8	6-32 x 1/4 x 1/4 AF Hex Hd Mach Screw (3 used on 22-3862)	.03
113-34	6-32 x 3/8 x 1/4 AF Hex Hd Mach Screw - External Shakeproof Lockwasher (2 req'd)	.03
114-26	8-18 x 1/4 x 1/4 Hex Hd Self-Tapping - Statuary Bronze (2 used on 12-3249)	.03
114-77	6-20 x 5/16 x 1/4 AF Hex Hd Self-Tapping Screw - Statuary Bronze (3 mount 57-4372)	.05
114-390	8-18 x 7/16 x 1/4 AF Hex Hd Self-Tapping Screw - Statuary Bronze (4 mount S-64565)	.03
114-393	6-32 x 1 3/8 x 1/4 AF Hex Hd Mach Screw (used on 212-23)	.03
114-564	8-18 x 5/16 Hex Hd Self-Tapping-Screw - Flatwasher Att. Statuary Bronze (2 mount S-54500 & 4 mount 95-2106)	.03
114-654	6-20 x 3/8 x 1/4 Hex Hd Self-Tapping Screw - Statuary Bronze (2 mount S-60926)	.03
114-801	8-18 x 5/16 x 1/4 Hex Hd Self-Tapping Screw - Statuary Bronze (1 mounts 57-3519 and 4 mt. each S-60927 and 12-3680)	.03
114-804	8-18 x 1/2 Hex Hd Self-Tapping Screw - Flatwasher Attached - Statuary Bronze (4 mt. S-66347)	.03
114-901	6-20 x 7/16 Hex Hd Self-Tapping Screw - Flatwasher Attached - Statuary Bronze (4 mt. S-66387)	.03
121-302	Transistor 2N1302	
125-117	Rubber Grommet (4 req'd)	.03
126-797	Tube Shield - 6GQ7	.10
126-1048	Pilot Light Shield	.10
126-1049	Hum Shield	.04
149-211	Iron Core (1 part of each S-54155 and S-54156)	.10
188-177	Retaining Ring (1 used on 94-1249 and 1 pt. of S-60575)	.03
188-322	Retaining Ring (1 part of each S-60929)	.03

PART NO.	DESCRIPTION	PRICE
192-319	Dial Crystal	
199-183	Shielded Paper Sleeve	
212-23	Selenium Rectifier	
S-54155	Oscillator Coil Assembly - BC	1.25
S-54156	Detector Coil Assembly - BC	1.25
S-54500	Antenna Assembly	2.50
S-60575	Knob and Ring Assembly -Tuning	2.00
S-60922	Drive Cord & Eyelet Assembly - Pointer	.15
S-60923	Drive cord & Eyelet Assembly - Pointer	.15
S-60926	Pulley & Bracket Assembly	.50
S-60927	Escutcheon Mounting Bracket Assembly	1.00
S-60928	Neon Bulb & Terminal Assembly	1.50
S-60929	Pointer Support & Ring Assembly (2 req'd)	.10
S-62551	Drive Cord & Eyelet Assembly (Gang)	.15
S-62552	Drive Cord & Eyelet Assembly (Gang)	.15
S-64565	Trim Plate & Escutcheon Assembly	
S-66347	F.M. Tuner Assembly (See F.M. Tuner Parts List for Components)	
S-66397	Dial Scale & Channel Strip Assembly	

CHASSIS 8MT25

PART NO.	DESCRIPTION	PRICE
22-17	.001 Mf. Disc Capacitor-1000V. (3 req'd)	.25
22-1840	.033 Mf. Capacitor-200V. (2 req'd)	.35
22-2071	.022 Mf. Capacitor-200V. (2 req'd)	.26
22-2655	.01 Mf. Disc Capacitor-1400V.	.50
22-3135	.1 Mf. Capacitor-400V.	.35
22-3241	100 Mf. Electrolytic Capacitor-50V. (2 req'd)	1.50
22-3878	2000 Mf. Electrolytic Capacitor-75V.	6.50
22-3880	Three Section Electrolytic Capacitor-100/50V. 200/25V. 100/25V.	4.00
22-3881	1500 Mf. Electrolytic Capacitor-50V.	5.00
22-3882	Two Section Electrolytic Capacitor-150/250V. 150/200V.	3.50
22-3883	50 Mf. Electrolytic Capacitor-50V.	1.25
22-5052	500 Mf. Electrolytic Capacitor-50V. (2 req'd.)	
43-333	Three Contact Housing (Male)	.20
43-573	Six Contact Housing (Female)	.15
43-574	Nine Contact Housing (Female)	.35
54-385	6-32 x 5/16 Hex Nut (Used on 114-393)	.03
54-579	10-32 x 3/8 x 3/16 Thick Hex Nut-Cadmium (1 used on each 212-40)	.03
62-30	Fuse Holder	.40
63-1785	1000 Ohm Resistor ½W. 10%	.17
63-1799	2200 Ohm Resistor ½W. 10%	.17
63-1817	5600 Ohm Resistor ½W. 10% (2 req'd)	.17
63-1827	10K Ohm Resistor ½W. 10% (5 req'd)	.17
63-1841	22K Ohm Resistor ½W. 10% (2 req'd)	.17
63-1912	1 Megohm Resistor ½W. 20%	.17
63-5001	1650 Ohm Resistor 10W. 10%	.90
63-5190	2.2 Ohm Resistor 1W. 10% (4 req'd)	.25
63-5217	2 Ohm Resistor 10W. 10F	.80
63-5222	130 Ohm Resistor 5W. 5%	.75
63-5282	.39 Ohm Resistor 5W. 5% (2 req'd)	.75
63-5367	.43 Ohm Resistor 5W. 5% (2 req'd)	
63-5368	90 Ohm Resistor 5W. 10%	
63-5369	220 Ohm Resistor 5W. 10% (2 req'd)	
63-5599	22 Ohm Resistor 2W. 20%	.34
63-5635	150 Ohm Resistor 2W. 10% (2 req'd)	.34
63-5641	220 Ohm Resistor 2W. 20% (2 req'd)	.34
63-5656	470 Ohm Resistor 2W. 10% (2 req'd)	.34
78-402	Four Contact Socket	.15
78-1223	Three Contact Transistor Socket (2 req'd)	.35
78-1347	Electrolytic Socket (5 req'd)	.10
78-1568	Two Contact Transistor Socket (6 req'd)	.35
83-1520	Rectifier Insulating Strip (Used on 212-39)	.05
83-3265	Five Lug Terminal Strip (6 req'd)	.10
83-3881	Four Lug Terminal Strip	.20
83-4203	Three Lug Terminal Strip	
83-4523	Insulating Strip-Transistor (6 req'd)	.05
83-4633	Felt Strip	.03
86-328	Wire Retaining Terminal (2 req'd)	.03
86-303	Terminal - Male (2 req'd)	.04
86-389	Terminal - Female (14 req'd)	.03
93-166	Internal Shakeproof Lockwasher (Used 114-393)	.03
93-369	Internal Shakeproof Lockwasher (used on each 212-40)	.03
95-2108	Driver Transformer	3.25

PART NO.	DESCRIPTION	PRICE
95-2214	Power Transformer	
95-2217	Driver Transformer	
113-156	6-32 x 9/16 Phillips Pan Head Machine Screw (2 used on each 121-270 and 121-271)	.03
114-393	6-32 x 1 3/8 x 1/4 Hex Head Machine Screw (used on 212-39)	.03
114-699	10-16 x 3/8 Hex Washer Head Self-Tap Screw- Statuary Bronze (4 used on 95-2214)	.03
114-801	8-18 x 5/16 x 1/4 Hex Head Self-Tap Screw - Statuary Bronze (4 used on S-61233	.03
121-270	Transistor - Power (4 required)	6.65
121-271	Transistor - Driver (2 required)	2.80
121-272	Transistor - Pre- Driver (2 req'd.)	.95
136-61	Fuse - 3 amp.	.35
212-39	Selenium Rectifier	2.00
212-40	Silicon Rectifier (2 required)	2.50
S-61233	Heat Sink Assembly	4.00

CHASSIS 9MIT22 & 9MIT22Z

12-3249	Variable Capacitor Mounting Bracket	.05
12-3888	Dial Background Bracket	.25
12-4006	Chassis Mounting Bracket (L.H.)	
19-306	Coil Mounting Clip (2 required)	.10
22-3	.01 Mfd. Disc Capacitor - 500V. (12 required)	.30
22-5	100 Mmfd. Disc Capacitor 500V.	.25
22-7	.001 Mfd. Disc Capacitor - 500V.	.26
22-9	100 PF Disc Capacitor - 500V. (2 required)	.25
22-13	.0033 Mfd. Disc Capacitor - 500V. (2 required)	.25
22-17	.001 Mfd. Disc Capacitor - 500V.	.25
22-18	.0022 Mfd. Disc Capacitor - 500V. (5 required)	.25
22-26	.0015 Mfd. Disc Capacitor - 500V.	
22-2072	.022 Mfd. Capacitor - 400V. (2 required)	.26
22-2370	50 Mmfd. Disc Capacitor - 500V.	.25
22-2883	50 Mfd. Electrolytic Capacitor - 12V.	1.10
22-3255	330 Mmfd. Disc Capacitor - 500V. (3 required)	.25
22-3537	.047 Mfd. Capacitor - 200V (3 required)	.30
22-3618	10 Mfd. Electrolytic Capacitor 50V.	1.25
22-3694	.1 Mfd. Capacitor - 100V. (2 required)	.35
22-3763	.01 Mf. Capacitor - 200V. (2 required)	.30
22-3862	Three Section Variable Capacitor	4.50
22-3996	Electrolytic Capacitor	4.50
22-5015	.047 Mf. Capacitor - 200V.	
22-5058	.22 Mfd. Capacitor - 100V.	
43-570	Housing	.45
43-574	Housing	.35
52-996	Four Conductor Cable	.65
52-1113	Two Conductor Shielded Cable	.50
52-1114	Two Conductor Shielded Cable	.50
54-139	3/8 - 32 x 9/16 Palnut - Cadmium (4 required)	.03
57-3519	Antenna Mounting Plate	.10
59-622	Dial Pointer	.35
63-1736	68 Ohm Resistor ½W. 10% (2 required)	.17
63-1743	100 Ohm Resistor ½W. 10% (2 required)	.17
63-1744	100 Ohm Resistor ½W. 20% (2 required)	.17
63-1747	120 Ohm Resistor ½W. 10%	.17
63-1758	220 Ohm Resistor ½W. 20% (4 required)	.17
63-1778	680 Ohm Resistor ½W. 10%	.17
63-1785	1000 Ohm Resistor ½W. 10% (2 required)	.17
63-1786	1000 Ohm Resistor ½W. 20% (2 required)	.17
63-1796	1800 Ohm Resistor ½W. 10%	.17
63-1806	3300 Ohm Resistor ½W. 10% (3 required)	.17
63-1820	6800 Ohm Resistor ½W. 10% (2 required)	.17
63-1825	9100 Ohm Resistor ½W. 5%	.34
63-1826	10K Ohm Resistor ½W. 5%	.34
63-1835	15K Ohm Resistor ½W. 20%	.17
63-1841	22K Ohm Resistor ½W. 10%	.17
63-1842	22K Ohm Resistor ½W. 20%	.17
63-1848	33K Ohm Resistor ½W. 10% (2 required)	.17
63-1852	39K Ohm Resistor ½W. 10%	.17
63-1856	47K Ohm Resistor ½W. 20% (3 required)	.17
63-1859	56K Ohm Resistor ½W. 10% (2 required)	.17
63-1866	82K Ohm Resistor ½W. 10%	.17
63-1869	100K Ohm Resistor ½W. 10% (2 required)	.17
63-1870	100K Ohm Resistor ½W. 20% (3 required)	.17
63-1880	180K Ohm Resistor ½W. 10%	.17
63-1883	220K Ohm Resistor ½W. 10% (6 required)	.17

PART NO.	DESCRIPTION	PRICE
63-1884	220K Ohm Resistor ½W. 20% (2 required)	.17
63-1890	330K Ohm Resistor ½W. 10%	.17
63-1911	1 Megohm Resistor ½W. 10% (2 required)	.17
63-1912	1 Megohm Resistor ½W. 20% (4 required)	.17
63-1915	1.2 Megohm Resistor ½W. 10%	.17
63-1925	2.2 Megohm Resistor ½W. 10%	.17
63-1926	2.2 Megohm Resistor ½W. 20%	.17
63-1933	3.3 Megohm Resistor ½W. 20%	.17
63-1940	4.7 Megohm Resistor ½W. 20% (2 required)	.17
63-1954	10 Megohm Resistor ½W. 20%	.17
63-4880	Potentiometer	1.40
63-5268	Loudness Control	3.50
63-5269	Bass Control	4.25
63-5270	Treble Control	3.00
63-5272	1250 Ohm Resistor 10W 10% (2 required)	.90
63-5273	4K Ohm Resistor 7W 10%	.90
63-6091	3300 Ohm 1W 10%	.25
63-6122	18K Ohm 1W 10%	.25
78-346	Five Contact Socket	.20
78-1099	Three Contact Socket	.20
78-1311	Wafer Socket (12BA6 - V6)	.35
78-1333	Noval Wafer Socket (6GQ7)	.35
78-1560	Wafer Socket (12BA6) (2 required)	.35
78-1561	Wafer Socket (12AU6)	.35
78-1562	Noval Wafer Socket (6EA8-12AX7A)	.35
78-1564	Wafer Socket (12BE6)	.35
78-1602	Noval Wafer Socket (12AX7A)	.35
80-1140	Tension Spring (Pointer)	.10
80-1188	Tension Spring (Gang)	.10
80-1763	Retaining Spring (2 part of S-61711)	
83-1475	Armite Strip (3 required)	.03
83-2145	Five Lug Terminal Strip	.10
83-2538	Three Lug Terminal Strip	.10
83-2639	Three Lug Terminal Strip (3 required	.05 .05
83-3265	Five Lug Terminal Strip (2 required)	.10
83-3561	Antenna Cable Retaining Strip	.05
83-3660	Two Lug Terminal Strip	.03
83-3675	Twelve Lug Terminal Strip	.30
83-3676	Four Lug Terminal Strip	.10
83-4125	Two Lug Terminal Strip	.10
83-4530	Thirteen Lug Terminal Strip	.35
83-4950	Five Lug Terminal Strip	
85-808	Bandswitch	7.25
86-312	Terminal	.03
86-389	Terminal (9 required)	.03
86-390	Terminal (4 required)	.03

PART NO.	DESCRIPTION	PRICE
93-127	Internal Shakeproof Lockwasher (2 required)	.03
93-1522	Spring Washer (used on 100-325)	.03
94-812	Coil Insert (1 part of each S-54155 and S-54156)	.05
95-1915	1st I.F. Transformer (AM)	2.50
95-1917	3rd I.F. Transformer (AM)	2.50
95-1919	2nd & 3rd I.F. Transformer (FM) (2 required)	2.50
95-1920	Ratio Detector Transformer (FM)	2.50
95-1924	2nd I.F. Transformer (AM)	2.50
95-2073	Input Mixer Transformer (FM)	2.50
95-2076	Double Mixer Transformer	4.50
95-2077	Detector Mixer Transformer	3.00
95-2078	Trap Coil	2.50
100-325	Neon Bulb and Wire	1.50
103-23	Diode (2 required)	.75
105-42	R/C Network	.50
105-50	R/C Network	.90
113-8	6-32 x 1/4 x 1/4 Hex Head Machine Screw-Internal Lockwasher attached (2 used on 22-3862, and 1 joins 22-3862 & 83-4125)	.03
114-77	6-20 x 5/16 x 1/4 Hex Head Self-Tap Screw- Statuary Bronze (2 used on 12-3888)	.03
114-26	8-18 x 1/4 x 1/4 Hex Head Self-Tap Screw - Statuary Bronze (2 used on 12-3249)	.03
114-564	8-18 x 5/16 Hex Head Self-Tap Screw - Statuary Bronze - Flat Washer Attached (2 join S-54500 & 57-3519)	.03
114-801	8-18 x 5/16 x 1/4 Hex Head Self-Tap Screw - Statuary Bronze (15 required)	.03
114-804	8-18 x ½ Hex Head Self-Tap Screw-Statuary Bronze - Flat Washer Attached (4 mount S-64706)	.03
121-302	Transistor	.65
125-117	Rubber Grommet (4 required)	.03
126-797	Tube Shield (6GQ7)	.10
149-211	Iron Core (2 part of each S-54155 & S-54156)	.10
199-183	Shielded Paper Sleeve	.03
S-54155	AM Oscillator Coil Assembly	1.25
S-54156	Detector Coil Assembly	1.25
S-54500	Antenna Assembly	2.50
S-61711	Pointer Support Strip & Ring Assembly (2 required)	.10
S-64624	Chassis Mounting Bracket Assembly	
S-64625	Bracket & Pulley Assembly	
S-64644	Drive Cord & Eyelet Assembly (Gang)	.20

PART NO.	DESCRIPTION	PRICE
S-66346	F.M. Tuner Assembly used on 9MIT22Z only	30.00
S-64706	F.M. Tuner Assembly (See F.M. tuner parts list for components) Used on 9MIT22 only	30.00
S-65111	Drive Cord & Eyelet Assembly	
S-65173	Drive Cord & Eyelet Assembly	
S-65174	Drive Cord & Eyelet Assembly	

CHASSIS 9M1T23 AND 9M1T23Z PARTS

PART NO.	DESCRIPTION	PRICE
12-3249	Variable Capacitor Mounting Bracket	.05
17-181	Cable Clamp	.03
19-306	Coil Mounting Clip (2 required)	.10
19-440	Dial Crystal Retaining Clip (2 required)	.10
19-446	Dial Scale Retaining Clip	.03
22-3	.01 Mf. Disc Capacitor - 500 V. (10 required)	.30
22-5	100 PF Disc Capacitor - 500V.	.25
22-7	.001 PF Disc Capacitor - 500V.	.26
22-13	.0033 Mf. Disc Capacitor - 500V. (2 required)	.25
22-17	.001 Mf. Disc Capacitor - 500 V.	.25
22-18	.0022 Mf. Disc Capacitor - 500V. (5 required)	.25
22-2072	.022 Mf. Capacitor - 400 V. (2 required)	.26
22-2370	50 PF Disc Capacitor - 500V.	.25
22-2883	50 PF Electrolytic Capacitor	1.10
22-3255	330 Pf. Disc Capacitor - 500V. (3 required)	.25
22-3537	.047 Mf. Capacitor - 200 V. (3 required)	.30
22-3591	.1 Mf. Capacitor - 200 V (2 required)	.30
22-3618	10 Mf. Electrolytic Capacitor	1.25
	50 V.	1.25
22-3862	Three Section Variable Capacitor	4.50
22-3996	Electrolytic Capacitor	4.50
22-5015	.047 Mf. Capacitor - 200V.	
22-5058	.22 Mf. Capacitor - 100V.	
43-574	Contact Housing	.35
46-3512	Push Button (AM)	.35
46-3513	Push Button (FM)	.35
46-3514	Push Button (FM-AFC)	.35
46-3515	Push Button (Phono)	.35
46-3517	Push Button (TV)	.35
52-1116	Two Conductor Shielded Cable	.75
52-1117	Two Conductor Shielded Cable	.75
54-504	Tinnerman Speed Nut (Used on S-66397)	.03
54-541	Palnut (1 used on each 19-440 & 2 used on each 83-4535)	.03
54-549	Tinnerman Speed Nut (2 used on 192-319)	.03
57-3519	Antenna Mounting Plate	.10
57-4372	Dial Scale Background Plate	2.00
57-4373	Chassis Bottom Plate	1.00
57-4374	Trim Plate (Part of S-64565)	1.50
59-547	Dial Pointer	.60
63-1736	68 Ohm Resistor 1/2 W 10% (2 required)	.17
63-1743	100 Ohm Resistor 1/2 W 10% (2 required)	.17
63-1744	100 Ohm Resistor 1/2 W 20% (2 required)	.17
63-1747	120 Ohm Resistor 1/2 W 10%	.17
63-1758	220 Ohm Resistor 1/2 W 20% (4 required)	.17
63-1778	680 Ohm Resistor 1/2 W 10%	.17
63-1785	1000 Ohm Resistor 1/2 W 10% (2 required)	.17
63-1786	1000 Ohm Resistor 1/2 W 20% (2 required)	.17
63-1796	1800 Ohm Resistor 1/2 W 10%	.17
63-1806	3300 Ohm Resistor 1/2 W 10% (3 required)	.17
63-1820	6800 Ohm Resistor 1/2 W 10% (2 required)	.17
63-1825	9100 Ohm Resistor 1/2 W 5%	.34
63-1826	10K Ohm Resistor 1/2 W 5%	.34
63-1835	15K Ohm Resistor 1/2 W 20%	.17
63-1841	22K Ohm Resistor 1/2 W 10%	.17
63-1842	22K Ohm Resistor 1/2 W 20%	.17
63-1848	33K Ohm Resistor 1/2 W 10% (2 required)	.17
63-1852	39K Ohm Resistor 1/2 W 10%	.17
63-1856	47K Ohm Resistor 1/2 W 20% (3 required)	.17
63-1859	56K Ohm Resistor 1/2 W 10% (2 required)	.17
63-1866	82K Ohm Resistor 1/2 W 10%	.17
63-1869	100 K Ohm Resistor 1/2 W 10% (2 required)	.17
63-1870	100K Ohm Resistor 1/2 W 20% (3 required)	.17
63-1880	180K Ohm Resistor 1/2 W 10%	.17
63-1883	220K Ohm Resistor 1/2 W 10% (2 required)	.17
63-1884	220K Ohm Resistor 1/2 W 20% (2 required)	.17
63-1890	330K Ohm Resistor 1/2 W 10%	.17
63-1911	1 Megohm Resistor 1/2 W 10% (2 required)	.17
63-1912	1 Megohm Resistor 1/2 W 20% (4 required)	.17

PART NO.	DESCRIPTION	PRICE
63-1915	1.2 Megohm Resistor 1/2 W 10%	.17
63-1925	2.2 Megohm Resistor 1/2 W 10%	.17
63-1926	2.2 Megohm Resistor 1/2 W 20%	.17
63-1940	4.7 Megohm Resistor 1/2 W 20% (2 required)	.17
63-1954	10 Megohm Resistor 1/2 W 20%	.17
63-4880	Potentiometer	1.40
63-5272	1250 Ohm Resistor 10 W 10% (2 required)	.90
63-5273	4K Ohm Resistor 7 W 10%	.90
63-6091	3300 Ohm Resistor 1 W 10%	.25
63-6122	18 K Ohm Resistor 1 W 10%	.25
71-139	8/32 x 3/8 Phillips Flat Hd. Mach. Screw - Statuary Bronze (8 mount 57-4373)	.03
78-346	Five Contact Socket	.20
78-1099	Three Contact Socket	.20
78-1311	Wafer Socket (12BA6-V6)	.35
78-1333	Noval Wafer Socket (6GQ7)	.35
78-1360	Pilot Light Socket	.25
78-1560	Wafer Socket (12BA6-V2-V3) (2 required)	.35
78-1561	Wafer Socket (12AU6)	.35
78-1562	Noval Wafer Socket (6EA8)	.35
78-1564	Wafer Socket (12BE6)	.35
78-1602	Noval Wafer Socket (12AX7A)	.35
80-1140	Tension Spring (Pointer)	.10
80-1188	Tension Spring (Gang)	.10
83-1475	Insulating Strip	.03
83-2538	Three Lug Terminal Strip	.10
83-2612	Two Lug Terminal Strip	.05
83-2639	Two Lug Terminal Strip (2 required)	.05
83-3561	Cable Retaining Strip	.05
83-3675	Twelve Lug Terminal Strip	.30
83-3676	Four Lug Terminal Strip	.10
83-4530	Thirteen Lug Terminal Strip	.35
83-4533	Rubber Channel Strip - Top & Bottom (2 required)	.25
83-4534	Rubber Channel Strip - Sides (2 required)	.10
83-4535	Dial Crystal Retainer (2 required)	.50
83-4543	Rubber Spacer (2 required)	.03
83-4822	Four Lug Terminal Strip (Used on S-64769)	.15
83-4851	Five Lug Terminal Strip	.25
83-4950	Five Lug Terminal Strip	
85-827	Push Button Bandswitch	10.00
86-312	Shakeproof Terminal	.03
86-388	Connector Terminal (2 part of S-60928)	.05
86-389	Female Terminal (9 required)	.03
93-127	Internal Shakeproof Lockwasher (2 required)	.03
93-898	.032 x .323 x 5/8 Steel Washer (Used on S-60928)	.03
93-1522	Spring Washer (Used on S-60928)	.03
93-1580	1/32 x .171 x .296 Steel Washer Black Oxide - Spacer (joins 57-4372 & S-66397)	.03
94-812	Coil Insert (1 part of each S-54155 and S-54156)	.05
94-1249	Shaft Bushing	.25
95-1915	1st I.F. Transformer (AM)	2.50
95-1917	3rd I.F. Transformer (AM)	2.50
95-1919	2nd & 3rd I.F. Transformer (FM) (2 required)	2.50
95-1920	Ratio Detector Transformer FM	2.50
95-1924	2nd I.F. Transformer AM	2.50
95-2073	Input Mixer Transformer	2.50
95-2076	Doubler Transformer (Multiplex)	4.50
95-2077	Detector Transformer (Multiplex)	3.00
95-2078	Trap Coil (67 Kc)	2.50
100-249	Pilot Light Bulb	.10
103-23	Crystal Diode	.75
105-42	R/C Network	.50
105-50	R/C Network (2 required)	.90
113-8	6-32 x 1/4 x 1/4 Hex Hd. Mach. Screw - Internal Shakeproof Lockwasher (2 used on 22-3862)	.03
113-34	6-32 x 3/8 x 1/4 Hex Hd. Mach. Screw - External Shakeproof Lockwasher (2 required)	.03
114-26	8-18 x 1/4 x 1/4 Hex Hd. Self-Tap. Screw Statuary Bronze (2 used on 12-3249)	.03
114-77	6-20 x 5/16 x 1/4 Hex Hd. Self-Tap. Screw - Statuary Bronze (3 mount 57-4372)	.03
114-390	8-18 x 7/16 x 1/4 Hex Hd. Self-Tap Screw - Statuary Bronze (4 mount S-64565)	.03
114-564	8-18 x 5/16 Hex Hd. Self-Tap. Screw - Statuary Bronze - Flat Washer Attached (2 mount S-54500)	.03
114-645	6-20 x 3/8 x 1/4 Hex Hd. Self-Tap. Screw - Statuary Bronze (2 mount S-60926)	.03
114-801	8-18 x 5/16 x 1/4 Hex Hd. Self-Tap. Screw - Statuary Bronze (1 mount 57-3519 and 4 mount each S-60927 and 12-3680)	.03
114-804	8-18 x 1/2 Hex Hd. Self-Tap. Screw - Statuary Bronze - Flat Washer Attached (4 mount S-66327)	.03
114-901	6-20 x 7/16 Hex Hd. Self-Tap Screw - Statuary Bronze - Flat Washer Attached (4 mount S-66397)	.03
121-302	Transistor	.65
125-117	Rubber Grommet (4 required)	.03
126-797	Tube Shield (6GQ7)	.10
126-1048	Pilot Light Shield	.10

PART NO.	DESCRIPTION	PRICE
149-211	Iron Core (1 part of each S-54155 and S-54156)	.10
188-177	Retaining Ring (1 used on 94-1249 and 1 part of S-60575)	.03
188-322	Retaining Ring (1 part of each S-60929)	.03
192-319	Dial Crystal	.60
199-183	Shielded Paper Sleeve	.03
S-54155	Oscillator Coil Assembly (BC)	1.25
S-54156	Detector Coil Assembly (BC)	1.25
S-54500	Antenna Assembly	2.50
S-60575	Knob & Ring Assembly (Tuning)	2.00
S-60922	Drive Cord & Eyelet Assembly (Pointer)	.15
S-60923	Drive Cord & Eyelet Assembly (Pointer)	.15
S-60926	Pulley & Bracket Assembly	.50
S-60927	Escutcheon Mtg. Bracket Assembly (L.H.)	1.00
S-60928	Neon Bulb & Terminal Assembly	1.50
S-60929	Pointer Support & Ring Assembly (2 required)	.10
	Assembly - used on 9M1T23 only	
S-60934	Dial Scale and Channel Strip Assembly - used on 9M1T23 only	
S-61017	F.M. Tuner Assembly used on 9M1T23 only (See F.M. Tuner Parts List for Components)	
S-62551	Drive Cord & Eyelet Assembly (Gang)	.15
S-62552	Drive Cord & Eyelet Assembly (Gang)	.15
S-64565	Trim Plate & Escutcheon Assembly	
S-64769	Escutcheon Mtg. Bracket Assembly (R.H.)	
S-66347	F.M. Tuner Assembly (See F.M. Tuner Parts list for components) Used on 9M1T23Z only	
S-66397	Dial Scale & Channel Strip	

CHASSIS 10MT25

322-22 or 22-2884	5 Mf. Electrolytic Capacitor (4 required)	
	5 Mf. Electrolytic Capacitor (4 required)	1.50
22-18	.0022 Mf. Disc Capacitor - 500 V. (2 required)	.25
22-2655	.01 Mf. Disc Capacitor - 1400 V.	.50
22-3255	330 PF Disc Capacitor - 500 V. (2 required)	.25
22-3267	.22 Mf. Capacitor - 50 V. (4 required)	.60
22-3442	.47 Mf. Capacitor - 50 V. (2 required)	.80
22-3595	.33 Mf. Capacitor - 50 V. (4 required)	.60
22-3694	.1 Mf. Capacitor - 100 V (2 required)	.35
22-3722	.047 Mf. Capacitor - 50 V. (2 required)	
22-3765	2 x 100 Mf. Electrolytic Capacitor	1.50
22-3892	.01 Mf. Capacitor - 200 V (2 required)	.30
22-5010	Three Section Electrolytic Capacitor	
22-5011	Single Section Electrolytic Capacitor (2 required)	
22-5012	.15 Mf. Capacitor - 50 V. (4 required)	
22-5020	1500 Mf. Electrolytic Capacitor	
54-139	3/8 - 32 x 9/16 Palnut - Cadmium (1 used on each 63-5211, 63-5295 and 63-5382)	.03
58-246	Two Prong Plug - AC (Part of S-59959)	.15
63-1701	10 Ohm Resistor 1/2 W 10% (2 required)	.17
63-1733	56 Ohm Resistor 1/2 W 10%	.17
63-1750	150 Ohm Resistor 1/2 W 10% (2 required)	.17
63-1775	560 Ohm Resistor 1/2 W 10% (2 required)	.17
63-1778	680 Ohm Resistor 1/2 W 10% (2 required)	.17
63-1785	1000 Ohm Resistor 1/2 W 10% (4 required)	.17
63-1789	1200 Ohm Resistor 1/2 W 10%	.17
63-1803	2700 Ohm Resistor 1/2 W 10% (2 required)	.17
63-1810	3900 Ohm Resistor 1/2 W 10% (2 required)	.17
63-1813	4700 Ohm Resistor 1/2 W 10% (5 required)	.17
63-1827	10 K Ohm Resistor 1/2 W 10% (4 required)	.17
63-1831	12K Ohm Resistor 1/2 W 10% (2 required)	.17
63-1838	18K Ohm Resistor 1/2 W 10% (2 required)	.17
63-1855	47K Ohm Resistor 1/2 W 10% (3 required)	.17
63-1862	68K Ohm Resistor 1/2 W 10% (4 required)	.17
63-1869	100K Ohm Resistor 1/2 W 10% (2 required)	.17
63-1876	150K Ohm Resistor 1/2 W 10% (2 required)	.17

PART NO.	DESCRIPTION	PRICE
63-4533	5.6 Ohm Resistor 1/2 W 10% (4 required)	.17
63-5211	Dual Treble Control	3.25
63-5294	5 Ohm Resistor 5 W 10%	
63-5295	Dual Bass Control & Switch	
63-5325	1 Ohm Resistor 1 W 10%	
63-5382	Dual Loudness Control	
63-6059	560 Ohm Resistor 1 W 10% (2 required)	
63-6066	820 Ohm Resistor 1 W 10% (2 required)	.25
78-402	Four Contact Socket	.15
78-1099	Three Contact Socket	.20
78-1347	Electrolytic Socket (2 required)	.10
78-1366	Three Contact Transistor Socket (6 required)	.30
78-1560	Two Contact Transistor Socket (4 required)	.35
83-1475	Insulating Strip	.03
83-2639	Three Lug Terminal Strip (2 required)	.05
83-3575	Fuse Holder	.25
83-3648	Four Lug Terminal Strip (2 required)	.05
83-3671	Five Lug Terminal Strip	.15
83-3673	Ten Lug Terminal Strip	.25
83-3675	Twelve Lug Terminal Strip	.30
83-4203	Three Lug Terminal Strip	
83-4523	Insulating Strip - Transistor (4 required)	.05
90-665	Spacer Sleeve (2 required)	.03
95-2173	Driver Transformer (2 required)	
95-2174	Power Transformer	
113-163	6-32 x 3/8 Phillips Pan Hd. Mach. Screw - Cadmium - Internal Lock-washer (2 used on each 121-308)	
114-699	10-16 x 3/8 Hex Washer Hd. Self-Tap Screw - Statuary Bronze (4 used on 95-2174)	.03
114-791	6-20 x 3/4 Hex Washer Hd. Self-Tap Screw - Statuary Bronze (1 used on each 90-665)	.03
121-305	Transistor - Amplifier (2 required)	
121-306	Transistor - Pre Amp (2 required)	
121-307	Transistor - Driver (2 required)	
121-308	Transistor - Output (4 required)	
136-50	Fuse - 1 Amp. 250 V.	
212-27	Silicon Rectifier (2 required)	2.00
S-59959	A.C.. Plug & Bracket Assembly	.40

CHASSIS 10MT26

PART NO.	DESCRIPTION	PRICE
22-14	.0047 Mf. Capacitor - 500 V (4 required)	.25
22-2655	.01 Mf. Disc Capacitor - 1400 V	.50
22-3879	1000 Mfd. Electrolytic Capacitor	3.50
22-3973	100 Mf. Electrolytic Capacitor (2 required)	1.00
22-5010	Three Section Electrolytic Capacitor	
22-5011	Electrolytic Capacitor (2 required)	
43-574	Nine Contact Housing (female)	.35
58-246	Two Prong Plug - AC (Part of S-59959)	.15
63-1768	390 Ohm Resistor 1/2 W 10% (2 required)	.17
63-1827	10 K Ohm Resistor 1/2 W 10% (3 required)	.17
63-4519	2.7 Ohm Resistor 1/2 W 10% (4 required)	.17
63-5305	.51 Ohm Resistor 5 W 5% (4 required)	
63-6003	27 Ohm Resistor 1 W 10%	
63-6031	120 Ohm Resistor 1 W 10%	
63-6042	220 Ohm Resistor 1 W 10% (2 required)	.25
63-6049	330 Ohm Resistor 1 W 10% (2 required)	
78-402	Four Contact Socket	.15
78-1347	Electrolytic Socket (2 required)	.15
78-1366	Three Contact Transistor Socket (2 required)	.30
78-1568	Two Contact Transistor Socket (4 required)	.35
83-3575	Fuse Holder Strip	.25
83-3673	Ten Lug Terminal Strip	.25
83-3676	Four Lug Terminal Strip	.10
83-4203	Three Lug Terminal Strip	
83-4523	Insulating Strip - Transistor (4 required)	.05
86-389	Terminal - Female (6 required)	.03
95-2182	Power Transformer	
95-2183	Driver Transformer	
113-163	6-32 x 3/8 Phillips Pan Hd. Mach. Screw - Cadmium - Internal Lock-washer (2 used on each 121-308)	
114-699	10-16 x 3/8 Hex Washer Hd. Self-Tap. Screw - Statuary Bronze (4 used on 95-2182)	.03
114-801	8-18 x 5/16 x 1/4 Hex Hd. Self-Tap. Screw - Statuary Bronze (1 used on each 95-2183)	.03
121-307	Transistor - Driver (2 required)	
121-308	Transistor - Output (4 required)	
126-1085	Heat Dissipator (2 required)	
136-59	Fuse - 2 Amp.	
212-27	Silicon Rectifier (2 required)	2.00
S-59959	A.C. Plug & Bracket Assembly	.40

CHASSIS 10M9T25 AND 10M9T25Z

PART NO.	DESCRIPTION	PRICE
12-3684	On-Off Switch Mounting Bracket	.15
12-3685	Pulley Bearing Bracket	.50
12-3686	Front Bracket - Indicator Light (3 required)	.10
12-3687	Variable Capacitor Mounting Bracket	.30
12-3691	Switch Mounting Bracket	.75
12-3979	Light Reflector Bracket	
17-149	Clamp (3 required)	.05
19-306	Coil Mounting Clip (2 required)	.10
19-448	Brass Clip	.05
19-451	Tinnerman Clip	.05
322-2	560 PF Disc Capacitor (3 required)	.15
or		
22-3362	560 PF Disc Capacitor (3 required)	.25
322-3	.01 Mf. Disc Capacitor - 25 V.	
or	(2 required)	.15
22-3010	.01 Mf. Disc Capacitor - 25 V. (2 required)	.45
22-2	220 PF Disc Capacitor - 500 V.	.25
22-3	.01 Mf. Disc Capacitor - 500 V. (17 required)	.30
22-13	.0033 Mf. Disc Capacitor - 500 V.	.25
22-16	470 PF Disc Capacitor - 500 V.	.25
22-17	.001 Mf. Disc Capacitor - 1000 V. (2 required)	.25
22-18	.0022 Mf. Disc Capacitor - 500 V. (2 required)	.25
22-1778	.047 Mf. Capacitor - 200 V. (2 required)	.30
22-2671	25 PF Disc Capacitor - 500 V.	.25
22-2703	220 PF Disc Capacitor - 500 V.	.25
22-2726	50 Mf. Electrolytic Capacitor - 10 V. (4 required)	1.50
22-2863	33 PF Disc Capacitor - 500 V.	.25
22-2939	680 PF Disc Capacitor - 500 V. (2 required)	.25
22-3133	10 Mf. Electrolytic Capacitor - 300 V.	1.75
22-3227	.022 Mf. Capacitor - 200 V. (4 required)	.25
22-3255	330 PF Disc Capacitor - 500 V. (3 required)	.25
22-3363	470 PF Disc Capacitor - 500 V.	.25
22-3618	10 Mf. Electrolytic Capacitor-50V.	1.25
22-3626	.22 Mf. Capacitor - 100 V.	.50
22-3678	.047 Mfd. Capacitor - 100 V. (2 required)	
22-3687	1 Mf. Electrolytic Capacitor - 50 V. (8 required)	
22-3694	1 Mf. Capacitor - 100 V. (2 required)	.35
22-3736	.047 Mf. Capacitor - 600 V.	.35
22-3865	Three Section Variable Capacitor	4.50
22-3889	50 PF Disc Capacitor - 500 V.	.15
22-3891	.0068 Mf. Capacitor - 100 V. (4 required)	.30
22-3896	5 Mf. Electrolytic Capacitor - 25 V. (4 required)	1.00
22-5012	.15 Mf. Capacitor - 50 V. (2 required)	
43-570	Male Contact Housing	.45
43-571	Male Contact Housing	.30
44-48	Connector Jack (2 part of S-54151)	.20
46-4033	Push Button (Tape)	
46-4034	Push Button (FM)	
46-4035	Push Button (AM)	
46-4036	Push Button (FM-AFC)	
46-4037	Push Button (Ext. Stereo)	
46-4038	Push Button (Monaural)	
46-4039	Push Button (Stereo)	
46-4040	Push Button (Phono)	
46-4041	Push Button (Push On - Push Off)	
52-1063	Two Conductor Shielded Lead	.60
52-1064	Two Conductor Shielded Lead	.75
52-1067	Two Conductor Shielded Lead	.50
52-1141	Two Conductor Shielded Lead	
54-139	3/8-32 x 9/16 Palnut - Cadmium (4 required)	.03
54-504	Tinnerman Speed Clip	.03
54-541	Palnut (2 used on each 80-1681 and 1 used on each 80-1682)	.03
57-3515	Chassis Bottom Plate	2.00
57-4387	Dial Scale Background Plate	2.50
57-4431	Indicator Light Backing Plate (3 required)	.05
59-548	Dial Pointer	.35
61-256	Tone Control Pulley (3 required)	.30
63-1743	100 Ohm Resistor 1/2 W 10% (2 required)	.17
63-1744	100 Ohm Resistor 1/2 W 20% (2 required)	.17
63-1764	330 Ohm Resistor 1/2 W 10% (3 required)	.17
63-1768	390 Ohm Resistor 1/2 W 10%	.17
63-1779	680 Ohm Resistor 1/2 W 20%	.17
63-1785	1000 Ohm Resistor 1/2 W 10% (2 required)	.17
63-1786	1000 Ohm Resistor 1/2 W 20%	.17
63-1789	1200 Ohm Resistor 1/2 W 10% (2 required)	.17
63-1796	1800 Ohm Resistor 1/2 W 10%	.17
63-1810	3900 Ohm Resistor 1/2 W 10% (4 required)	.17
63-1813	4700 Ohm Resistor 1/2 W 10% (4 required)	.17
63-1817	5600 Ohm Resistor 1/2 W 10% (2 required)	.17

PART NO.	DESCRIPTION	PRICE
63-1820	6800 Ohm Resistor 1/2 W 10% (2 required)	.17
63-1825	9100 Ohm Resistor 1/2 W 5%	.34
63-1826	10K Ohm Resistor 1/2 W 5%	.34
63-1827	10K Ohm Resistor 1/2 W 10% (6 required)	.17
63-1828	10K Ohm Resistor 1/2 W 20% (2 required)	.17
63-1834	15K Ohm Resistor 1/2 W 10% (2 required)	.17
63-1835	15K Ohm Resistor 1/2W 10%	.17
63-1838	18K Ohm Resistor 1/2W 10% (3 required)	.17
63-1841	22K Ohm Resistor 1/2W 10% (3 required)	.17
63-1842	22K Ohm Resistor 1/2W 20%	.17
63-1845	27K Ohm Resistor 1/2W 10% (3 required)	.17
63-1848	33K Ohm Resistor 1/2W 10% (2 required)	.17
63-1852	39K Ohm Resistor 1/2W 10% (3 required)	.17
63-1855	47K Ohm Resistor 1/2W 10%	.17
63-1859	56K Ohm Resistor 1/2W 10% (3 required)	.17
63-1862	68K Ohm Resistor 1/2W 10% (4 required)	.17
63-1866	82K Ohm Resistor 1/2W 10%	.17
63-1869	100K Ohm Resistor 1/2W 10%	.17
63-1870	100K Ohm Resistor 1/2W 20% (5 required)	.17
63-1876	150K Ohm Resistor 1/2W 10% (8 required)	.17
63-1883	220K Ohm Resistor 1/2W 10% (2 required)	.17
63-1898	470K Ohm Resistor 1/2W 20% (4 required)	
63-1905	680K Ohm Resistor 1/2W 20% (4 required)	.17
63-1911	1 Megohm Resistor 1/2 W 10%	.17
63-1912	1 Megohm Resistor 1/2 W 20% (3 required)	.17
63-1925	2.2 Megohm Resistor 1/2 W 10% (2 required)	.17
63-1926	2.2 Megohm Resistor 1/2 W 20% (2 required)	.17
63-1929	2.7 Megohm Resistor 1/2 W 10%	.17
63-1961	15 Megohm Resistor 1/2 W 20% (3 required)	.17
63-4880	Potentiometer	1.40
63-5146	Loudness Control	3.50
63-5147	Bass Control	2.75
63-5213	Presence Control	3.00

PART NO.	DESCRIPTION	PRICE
63-5372	Treble Control	
63-6091	3300 Ohm Resistor 1 W 10% (3 required)	
63-6101	5600 Ohm Resistor 1 W 10%	
63-6122	18 K Ohm Resistor 1 W 10%	.25
78-1089	Molded Tube Socket	.25
78-1099	Three Contact Socket	.20
78-1223	Transistor Socket (8 required)	.35
78-1391	Triple Light Socket & Wire	
78-1512	Dual Pilot Light Socket	.60
78-1560	Wafer Socket (6BA6)	.35
78-1562	Noval Wafer Socket (6EA8)	.35
78-1564	Wafer Socket (6BE 6)	.35
78-1569	Indicator Light & Wire (3 required)	.50
78-1576	Noval Wafer Socket (6GQ7)	.35
78-1577	Wafer Socket (6BA6)	.35
78-1578	Wafer Socket (6BN6)	.35
78-1579	Wafer Socket (6AU6)	.35
78-1580	Noval Wafer Socket	.35
80-1188	Tension Spring (Gang)	.10
80-1681	Glass Retaining Spring (2 required)	.20
80-1682	Glass Retaining Spring - Top (2 required)	.05
80-1683	Tone Pulley Tension Spring (3 required)	.20
80-1718	Tension Spring (Pointer)	.15
80-1734	Tuning Tape Retaining Spring	.10
80-1763	Retaining Spring (used on S-61711)	
83-1475	Cable Retaining Strip (5 required)	.03
83-2145	Five Lug Terminal Strip	.10
83-2216	Seven Lug Terminal Strip	.15
83-2649	Two Lug Terminal Strip (3 required)	.05
83-3025	Rubber Strip	.03
83-3641	Five Lug Terminal Strip	.10
83-3670	Six Lug Terminal Strip (2 required)	.15
83-3671	Five Lug Terminal Strip (2 required)	.15
83-3672	Eight Lug Terminal Strip (2 required)	.20
83-3674	Seven Lug Terminal Strip (3 required)	.20
83-3676	Four Lug Terminal Strip (3 required)	.10
83-4337	Three Lug Terminal Strip	.10
83-4537	Escutcheon Trim Strip (Part of S-61713)	2.00
83-4543	Center Bar Rubber Strip (3 required)	.03
83-4565	Rubber Channel Strip (2 required)	.05
83-4566	Rubber Channel Strip (2 required)	.20
85-849	A.C. Switch	2.00

PART NO.	DESCRIPTION	PRICE
85-824	Push Button Bandswitch	
86-328	Wire Retaining Terminal (3 required)	.03
86-344	Connector Terminal (2 part of S-61648)	.03
86-388	Connector Terminal (2 part of S-61721)	.05
86-390	Connector Terminal (15 required)	.03
86-416	Terminal (2 required)	
93-127	Internal Shakeproof Lockwasher (2 required)	.03
93-898	.032 x .323 x 5/8 Steel Washer	.03
93-1522	Spring Washer (used on S-61721)	.03
93-1580	Spacer Washer	.03
93-1595	Felt Washer	.03
94-812	Coil Insert (1 part of each S-54155 and S-54156)	.05
94-1248	Shaft Bushing	.35
95-1915	1st I.F. Transformer (AM)	2.50
95-1916	2nd I.F. Transformer (AM)	2.50
95-1917	3rd I.F. Transformer (AM)	2.50
95-1918	4th I.F. Transformer (AM)	2.50
95-1919	2nd & 3rd I.F. Transformer FM (2 required)	2.50
95-1920	Ratio Detector Transformer FM	2.50
95-2073	Input Mixer Transformer FM	2.50
95-2076	Doubler Mixer Transformer	4.50
95-2077	Detector Mixer Transformer	3.00
95-2078	Trap Coil	2.50
100-249	Pilot Light Bulb (8 required)	.18
103-34	Crystal Diode (2 required)	1.35
105-50	R/C Network (2 required)	.90
113-8	6-32 x 1/4 x 1/4 Hex. Hd. Mach. Screw - Internal Shakeproof Lockwasher (3 used on 22-3865 & 2 used on 85-807)	.03
114-26	8-18 x 1/4 x 1/4 Hex. Hd. Self-Tap Screw - Statuary Bronze (2 join 22-3865 & S-66348)	.03
114-344	6-20 x 1/4 x 1/4 Hex. Hd. Self-Tap Screw - Statuary Bronze (6 mount 57-3515, 4 used on each 12-3685 & 126-1090, 2 used on 12-3979, 1 used on 126-1051, and 3 used on 126-1050)	.03
114-390	8-18 x 7/16 x 1/4 Hex. Hd. Self-Tap Screw - Statuary Bronze (6 mount S-61713)	.03
114-594	8-18 x 3/8 Hex. Hd. Self - Tap Screw - Statuary Bronze - Flat Washer Attached (2 required)	.03
114-801	8-18 x 5/16 x 1/4 Hex. Hd. Self-Tap Screw - Statuary Bronze (20 required)	.03
114-804	8-18 x 1/2 Hex. Hd. Self-Tap Screw - Statuary Bronze - Flat Washer Attached (4 mount S-66348)	.03
114-813	6-20 x 3/8 x 1/4 Hex. Hd. Self-Tap Screw - Statuary Bronze (4 required)	.03
114-822	6-20 x 1/4 Hex. Hd. Self-Tap Screw - Black Oxide (4 required)	.03
121-273	Transistor - Pre Amp. (4 required)	.80
121-274	Transistor - Pre Amp. (2 required)	.80
121-275	Transistor - Pre Amp. (2 required)	.90
121-302	Transistor	.65
125-117	Rubber Grommet (4 required)	.03
125-130	Rubber Grommet	.03
126-797	Tube Shield (6EQ7-6GQ7) (2 required)	.10
126-1048	Pilot Light Shield (2 required)	.10
126-1050	Tone Indicator Background Shield	.50
126-1051	Transistor Shield	.50
126-1090	Light Shield	
126-1091	Hum Shield	
149-211	Iron Core (1 part of each S-54155 & S-54156)	.10
188-54	Knob Clamping Ring (Part of S-61503)	.03
188-120	Knob Clamping Ring (Part of S-61504)	.03
188-177	Knob Clamping Ring (1 part of each S-61499, S-61500, S-61501 & S-61502, and 1 used on 94-1248)	.03
188-367	Clamping Ring (4 part of S-61712)	.03
192-320	Dial Crystal	.60
199-263	Shielded Paper Sleeve	.10
199-299	Shielded Paper Sleeve	.05
199-405	Shielded Paper Sleeve	
S-18812	Antenna Loading Coil Assembly	.80
S-47742	Drive Cord & Eyelet Assembly (Treble)	.20
S-54151	Antenna Strip & Bracket Assembly	1.00
S-54155	Oscillator Coil Assembly (BC)	1.25
S-54156	Detector Coil Assembly (BC)	1.25
S-61363	FM Tuner Assembly (See FM tuner parts list) used on 10M9T25 only	30.00
S-61499	Knob & Ring Assembly (Tuning)	2.00
S-61500	Knob & Ring Assembly (Bass)	1.00
S-61501	Knob & Ring Assembly (Treble)	1.00
S-61502	Knob & Ring Assembly (Presence)	1.00
S-61503	Knob & Ring Assembly (Loudness)	1.50
S-61504	Knob & Ring Assembly (Balance)	.30
S-61648	Antenna Cable & Terminal Assembly	.25

PART NO.	DESCRIPTION	PRICE
S-61675	Escutcheon Mounting Bracket Assembly (Right Hand)	2.50
S-61710	Escutcheon Mounting Bracket Assembly (Left Hand)	2.25
S-61711	Pointer Support & Ring Assembly (2 required)	.10
S-61712	Tone Indicator & Ring Assembly	3.50
S-61713	Escutcheon Assembly	13.00
S-61714	Tone Indicator Mounting Bracket Assembly	1.50
S-61718	Shield & Lens Assembly (Bass)	.50
S-61719	Shield & Lens Assembly (Treble)	.50
S-61720	Shield & Lens Assembly (Presence)	.50
S-61721	Neon Bulb & Terminal Assembly	1.50
S-61727	Drive Cord & Eyelet Assembly (Gang)	.15
S-61728	Drive Cord & Eyelet Assembly (Gang)	.15
S-61729	Drive Cord & Eyelet Assembly (Treble)	.15
S-61730	Drive Cord & Eyelet Assembly (Bass)	.15
S-61731	Drive Cord & Eyelet Assembly (Presence)	.15
S-62371	Drive Cord & Eyelet Assembly (Pointer)	
S-65210	Bracket & Socket Assembly -Riveting	
S-62638	Dial Scale & Masking Assembly (used on 10M9T25 only)	6.50
S-66348	F.M. Tuner Assembly (See F.M. Tuner parts list for components)	
S-66437	Dial Scale & Masking Strip Assem. (used on 10M9T25Z only)	

FM TUNER S-61017 PARTS

PART NO.	DESCRIPTION	PRICE
12-3195	Coil Support Bracket	.15
22-1888	.001 Ceramic Capacitor 500 V.	.25
22-2374	6 Mmf. Disc Capacitor 500 V.	.25
22-2550	30 Mmf. Disc Capacitor 500 V.	.25
22-2676	0.51 Mmf. Gimmick Capacitor 500 V.	.25
22-2732	1000 Mmf. Feed-Thru Capacitor 500 V. (5 required)	.30
22-2896	16 Mmf. Disc Capacitor 500 V.	.25
22-3010	.01 Mfd. Disc Capacitor 25 V.	.45
22-3232	25 Mmf. Disc Capacitor 500 V.	.25
22-3270	22 Mmf Feed- Thru Capacitor (2 required)	.25
22-3456	2 x 12 Mmf. Disc Capacitor	.30
22-3621	22 Mmf. Disc Capacitor 500 V.	.25
56-426	Roll Pin (4 required)	.05
63-1845	27K Ohm Resistor 1/2 W 10%	.17
63-1869	100K Ohm Resistor 1/2 W 10%	.17
63-1870	100K Ohm Resistor 1/2 W 20%	.17
63-1939	4.7 Megohm Resistor 1/2 W 10%	.17
76-1154	Guide Shaft	.35
76-1167	Guide Shaft	.30
76-1371	Drive Shaft	
78-1169	Noval Molded Socket (6JK8)	.40
80-1467	Retaining Spring	.05
80-1521	Compression Spring	.05
80-1534	Shaft Tension Spring	
83-3783	Single Lug Terminal Strip (part of S-53205)	.05
86-331	Insulated Feed-Thru Terminal	.05
94-613	Iron Core Bushing (3 required)	.10
95-1900	1st I.F. Transformer (FM) 10.7 mc	2.50
103-39 or 103-47	Silicon Diode	3.00
	Silicon Diode	
113-26	6-32 x 1/4 x 1/4 Hex Hd. Mach. Screw - External Lockwasher Attached (2 used on 12-3195)	.03
125-116	Grommet (3 required)	.05
126-804	Tube Shield	.10
148-189	Tuner Guide Arm	.10
149-294	Iron Core & Spring (3 required)	.50
188-232	Clamping Ring (3 required)	.03
188-293	Retaining Ring	.05
S-13871	FM Detector Coil	1.00
S-14192	FM Antenna Coil	.90
S-52359	FM Oscillator Coil	.75
S-53205	Shield and Terminal Strip	.15
S-53700	Tuner Cover and Spring	.50

FM TUNER S-61363 PARTS

PART NO.	DESCRIPTION	PRICE
12-3195	Coil Support Bracket	.15
22-1888	.001 Ceramic Capacitor 500 V.	.25
22-2374	6 Mmf. Disc Capacitor 500 V.	.25
22-2550	30 Mmf. Disc Capacitor 500 V.	.25
22-2676	0.51 Mmf. Gimmick Capacitor 500 V.	.25
22-2732	1000 Mmf. Feed-Thru Capacitor 500 V. (5 required)	.30
22-2896	16 Mmf. Disc Capacitor 500 V.	.25
22-3010	.01 Mfd. Disc Capacitor 25 V.	.45
22-3232	25 Mmf. Disc Capacitor 500 V.	.25
22-3270	22 Mmf. Feed-Thru Capacitor 500 V (2 required)	.25
22-3456	2 x 12 Mmf. Disc Capacitor	.30
22-3621	22 Mmf. Disc Capacitor 500 V.	.25
56-426	Roll Pin (4 required)	.05
63-1845	27K Ohm Resistor 1/2 W 10%	.17
63-1869	100K Ohm Resistor 1/2 W 10%	.17
63-1870	100K Ohm Resistor 1/2 W 20%	.17

PART NO.	DESCRIPTION	PRICE
63-1939	4.7 Megohm Resistor 1/2 W 10%	.17
76-1154	Guide Shaft	.35
76-1167	Guide Shaft	.30
76-1375	Drive Shaft	
78-1169	Noval Molded Socket (6JK8)	.40
80-1467	Retaining Spring	.05
80-1521	Compression Spring	.05
80-1534	Shaft Tension Spring	
83-3783	Single Lug Terminal Strip (part of S-53205)	.05
86-331	Insulated Feed-Thru Terminal	.05
94-613	Iron Core Bushing (3 required)	.10
94-1900	1st I.F. Transformer (FM) 10.7 mc	2.50
103-39	Silicon Diode	3.00
or 103-47	Silicon Diode	
113-26	6-32 x 1/4 x 1/4 Hex Hd. Mach. Screw - External Lockwasher Attached (2 used on 12-3195)	.03
125-116	Grommet (3 required)	.05
126-804	Tube Shield	.10
148-189	Tuner Guide Arm	
149-294	Iron Core and Spring (3 required)	.50
188-232	Clamping Ring (3 required)	.03
188-293	Retaining Ring	.05
S-13871	FM Detector Coil	1.00
S-14192	FM Antenna Coil	.90
S-52359	FM Oscillator Coil	.75
S-53205	Shield and Terminal Strip	.15
S-53700	Tuner Cover and Spring	.50

FM TUNER S-64706 PARTS

12-3195	Coil Support Bracket	.15
22-1888	.001 Mf. Ceramic Capacitor 500 V.	.25
22-2374	6 PF Disc Capacitor 500 V.	.25
22-2550	30 PF Disc Capacitor 500 V.	.25
22-2676	.51 PF Gimmick Capacitor 500 V.	.40
22-2732	1000 PF Feed-Thru Capacitor 500 V. (5 required)	.30
22-2896	16 PF Disc Capacitor 500 V.	.25
22-3010	.01 Mf. Disc Capacitor 25 V.	.45
22-3232	25 PF Disc Capacitor 500 V.	.25
22-3270	22 PF Feed-Thru Capacitor 500 V. (2 required)	.25
22-3456	2 x 12 Pf. Disc Capacitor 500 V.	.30
22-3621	22 PF Disc Capacitor	.25
56-426	Roll Pin (6 required)	.05
63-1845	27K Ohm Resistor 1/2 W 10%	.17
63-1869	100K Ohm Resistor 1/2 W 10%	.17
63-1870	100K Ohm Resistor 1/2 W 20%	.17
63-1939	4.7 Megohm Resistor 1/2 W 10%	.17
76-1154	Guide Shaft	.35
76-1167	Guide Shaft	.30
76-1452	Drive Shaft	2.00
78-1169	Noval Molded Socket	.40
80-1467	Retaining Spring	.05
80-1521	Compression Spring	.05
80-1534	Shaft Tension Spring	
83-3783	Single Lug Terminal Strip	.05
86-331	Insulated Feed-Thru Terminal	.05
94-613	Iron Core Bushing (3 required)	.10
95-1900	1st I.F. Transformer (FM)	2.50
103-47	Silicon Diode	3.75
103-39	Silicon Diode	3.00
113-26	6-32 x 1/4 x 1/4 Hex Hd. Mach. Screw - External Lockwasher Attached (2 used on 12-3195)	.03
125-116	Rubber Grommet (3 required)	.05
126-804	Tube Shield	.10
148-189	Tuner Guide Arm	.75
149-294	Iron Core & Spring (3 required)	.50
188-293	Retaining Ring	.05
S-13871	FM Detector Coil Assembly	1.00
S-14192	FM Antenna Coil Assembly	.90
S-52359	FM Oscillator Coil Assembly	.75
S-53205	Shield & Terminal Strip Assembly	.15
S-53700	Tuner Cover & Spring Assembly	.50

FM TUNER S-66346 PARTS

22-1888	.001 Mf. Ceramic Capacitor 500 V.	.25
22-2374	6 PF Disc Capacitor 500 V.	.25
22-2676	.51 PF Gimmick Capacitor 500 V.	.40
22-2732	1000 PF Feed-Thru Capacitor 500 V. (5 required)	.30
22-2896	16 PF Disc Capacitor 500 V.	.25
22-3010	.01 Mf. Disc Capacitor 25 V.	.45
22-3232	25 PF Disc Capacitor 500 V	.25
22-3270	22 PF Feed-Thru Capacitor 500 V. (2 required)	.25
22-3456	2 x 12 PF Disc Capacitor 500 V.	.30
22-3621	22 PF Disc Capacitor 500 V. (2 required)	.25
56-426	Roll Pin (4 required)	.05
63-1806	3300 Ohm Resistor 1/2 W 10%	.17
63-1845	27K Ohm Resistor 1/2 W 10%	.17
63-1869	100K Ohm Resistor 1/2 W 10%	.17
63-1870	100K Ohm Resistor 1/2 W 10%	.17
63-1939	4.7 Megohm Resistor 1/2 W 10%	.17
76-1154	Guide Shaft	.35
76-1167	Guide Shaft	.30
76-1452	Drive Shaft	2.00
78-1169	Noval Molded Socket	.40
80-1467	Retaining Spring	.05
80-1521	Compression Spring	.05

PART NO.	DESCRIPTION	PRICE
80-1534	Shaft Tension Spring	
83-3783	Single Lug Terminal Strip (Part of S-53205)	.05
83-4859	Two Lug Terminal Strip	
86-331	Insulated Feed-Thru Terminal	.05
94-613	Iron Core Bushing (3 required)	.10
95-1900	1st I.F. Transformer (FM)	2.50
103-47	Silicon Diode	3.75
or		
103-39	Silicon Diode	3.00
113-26	6-32 x 1/4 x 1/4 Hex Hd. Mach. Screw - External Lockwasher Attached (2 used on S-65116)	.03
126-804	Tube Shield	.10
148-189	Tuner Guide Arm	.75
149-335	Iron Core & Spring	.25
149-336	Iron Core & Spring (2 required)	.25
S-53205	Shield & Terminal Strip Assembly	.15
S-53700	Tuner Cover & Spring Assembly	.50
S-65041	FM Antenna Coil Assembly	
S-65042	FM Oscillator Coil Assembly	
S-65043	FM Detector Coil Assembly	
S-65116	Coil Support Bracket Assembly	

FM TUNER S-66347 AND S-66348 PARTS

PART NO.	DESCRIPTION	PRICE
19-322	Coil Mounting Clip (3 required)	.05
22-1888	.001 Mf. Ceramic Capacitor 500 V.	.25
22-2374	6 PF Disc Capacitor 500 V.	.25
22-2676	.51 PF Gimmick Capacitor 500 V.	.40
22-2732	1000 PF Feed-Thru Capacitor 500 V. (5 required)	.30
22-2896	16 PF Disc Capacitor 500 V.	.25
22-3010	.01 Mf. Disc Capacitor 25 V.	.45
22-3232	25 PF Disc Capacitor 500 V	.25
22-3270	22 PF Feed-Thru Capacitor 500 V. (2 required)	.25
22-3456	2 x 12 PF Disc Capacitor 500 V.	.30
22-3621	22 PF Disc Capacitor 500 V. (2 required)	.25
56-426	Roll Pin (4 required)	.05
63-1806	3300 Ohm Resistor 1/2 W 10%	.17
63-1845	27 K Ohm Resistor 1/2 W 10%	.17
63-1869	100 K Ohm Resistor 1/2 W 10%	.17
63-1870	100 K Ohm Resistor 1/2 W 20%	.17
63-1939	4.7 Megohm Resistor 1/2 W 10%	.17
76-1154	Guide Shaft	.35
76-1167	Guide Shaft	.30
76-1371	Drive Shaft (For S-66347 only)	2.00
76-1375	Drive Shaft (For S-66348 only)	2.00
78-1169	Noval Molded Socket	.40
80-1467	Retaining Spring	.05
80-1521	Compression Spring	.05
80-1534	Shaft Tension Spring	
83-3783	Single Lug Terminal Strip (Part of S-53205)	.05
83-4859	Two Lug Terminal Strip	
86-331	Insulated Feed-Thru Terminal	.05
94-613	Iron Core Bushing (3 required)	.10
95-1900	1st I.F. Transformer (FM)	2.50
103-47	Silicon Diode	3.75
or		
103-39	Silicon Diode	3.00
113-26	6-32 x 1/4 x 1/4 Hex Hd. Mach. Screw - External Shakeproof Lockwasher (2 used on S-65116)	.03
126-804	Tube Shield	.10
148-189	Tuner Guide Arm	.75
149-335	Iron Core & Spring	.25
149-336	Iron Core & Spring (2 required)	.25
S-53205	Shield & Terminal Strip Assembly	.50
S-65041	FM Antenna Coil Assembly	
S-65042	FM Oscillator Coil Assembly	
S-65043	FM Detector Coil Assembly	
S-65116	Coil Support Bracket Assembly	

S-65077 F.M. TUNER

PART NO.	DESCRIPTION	PRICE
19-322	Coil Mounting Clip (3 used on S-65116)	.05
22-1888	.001 MF Ceramic Capacitor - 500V	.25
22-2374	6 PF Disc Capacitor - 500V (used on S-65042)	.25
22-2676	.51 PF Gimmick Capacitor - 500V	.40
22-2732	1000 PF Feed-thru Capacitor - 500V (5 required)	.30
22-2896	16 PF Disc Capacitor - 500V	.25
22-3010	.01 MF Disc Capacitor - 25V	.45
22-3232	25 PF Disc Capacitor - 500V (used on S-65043)	.25
22-3270	22 PF Feed-thru Capacitor - 500V (2 required)	.25
22-3456	2 x 12 PF Disc Capacitor - 500V	.30
22-3621	22 PF Disc Capacitor - 500V (1 used on each S-65041 & S-65042)	.25
56-426	Roll Pin (4 required)	.05
63-1806	3300 Ohm Resistor 1/2 W 10%	.17
63-1845	27K Ohm Resistor 1/2 W 10%	.17
63-1869	100K Ohm Resistor 1/2 W 10%	.17
63-1870	100K Ohm Resistor 1/2 W 20%	.17
63-1939	4.7 Megohm Resistor 1/2 W 10%	.17
76-1154	Guide Shaft	.35
76-1167	Guide Shaft	.30
76-1182	Drive Shaft	1.50
78-1169	Noval Molded Socket	.40
80-1467	Retaining Spring	.05
80-1521	Compression Spring	.05
80-1534	Shaft Tension Spring	
83-4859	Two Lug Terminal Strip (Part of S-65116)	
86-331	Insulated Feed-thru Terminal (2 required)	.05
93-1185	Fibre Washer	.03
95-1900	1st I.F. Transformer (FM)	2.50
103-47 or 103-39	Silicon Diode	3.75
	Silicon Diode	3.00
113-26	6-32 x 1/4 x 1/4 Hex Hd. Mach. Screw - External Lockwasher Attached (2 used on S-65116)	.03
126-804	Tube Shield	.10
148-189	Tuner Guide Arm	.75
149-335	Iron Core & Spring	.25
149-336	Iron Core & Spring (2 required)	.25
S-53205	Shield & Terminal Strip Assembly	.15
S-53700	Tuner Cover & Spring Assembly	.50
S-65041	FM Antenna Coil Assembly	
S-65042	FM Oscillator Coil Assembly	
S-65043	FM Detector Coil Assembly	
S-65116	Coil Support Bracket Assembly	

CHASSIS 11J01

PART NO.	DESCRIPTION	PRICE
19-306	Coil Mounting Clip (2 required)	.10
22-3	.01 Mfd. Disc Capacitor - 500V (15 required)	.30
22-5	100 Mmfd. Disc Capacitor - 500V	.25
22-9	100 PF Disc Capacitor - 500V (2 required)	.25
22-13	.0033 MF Disc Capacitor - 500V	.25
22-14	.0047 MF Disc Capacitor - 500V (2 required)	.25
22-16	470 PF Disc Capacitor - 500V	.25
22-17	.001 MF Capacitor - 1000V	.25
22-18	.0022 MF Disc Capacitor - 500V (2 required)	.25
22-1561	50 MF Electrolytic Capacitor - 25V	1.50
22-2072	.022 MF Capacitor - 400V (2 required)	.26
22-2371	25 PF Disc Capacitor - 500V	.25
22-2569	.047 MF Capacitor - 600V	.40
22-2655	.01 MF Disc Capacitor - 1400V (2 required)	.50
22-3255	330 PF Disc Capacitor - 500V (3 required)	.25
22-3518	.047 MF Capacitor - 200V	
22-3537	.047 MF Capacitor - 200V (3 required)	.30
22-3577	1 MF Capacitor - 600V	.40
22-3636	Electrolytic 60/150 150/150 150/150	3.00
22-3694	1 Mfd. Capacitor - 100V (2 required)	.35
22-5014	Three Section Variable Capacitor	
22-5021	.0068 MF Disc Capacitor - 1000V (2 required)	.30
22-5030	10 MF Electrolytic Capacitor - 50V	
22-5031	1 MF Electrolytic Capacitor - 50V	
44-46	Dual Connector Jack (Part of S-65200)	.20
54-139	3/8-32 x 9/16 Palnut - Cadmium (1 used on each 63-4910, 63-4923 & 85-815)	.03
58-246	Two Prong Plug	.15
63-1575	39 Ohm Resistor 2 W 10%	.34
63-1730	47 Ohm Resistor 1/2 W 20%	.17
63-1737	68 Ohm Resistor 1/2 W 20% (2 required)	.17
63-1740	82 Ohm Resistor 1/2 W 10% (2 required)	.17
63-1744	100 Ohm Resistor 1/2 W 20% (2 required)	.17

PART NO.	DESCRIPTION	PRICE
63-1747	120 Ohm Resistor 1/2 W 10%	.17
63-1758	220 Ohm Resistor 1/2 W 20% (4 required)	.17
63-1785	1000 Ohm Resistor 1/2 W 10% (2 required)	.17
63-1786	1000 Ohm Resistor 1/2 W 20% (2 required)	.17
63-1789	1200 Ohm Resistor 1/2 W 10%	.17
63-1796	1800 Ohm Resistor 1/2 W 10%	.17
63-1799	2200 Ohm Resistor 1/2 W 10% (3 required)	.17
63-1820	6800 Ohm Resistor 1/2 W 10% (2 required)	.17
63-1835	15K Ohm Resistor 1/2 W 20%	.17
63-1842	22K Ohm Resistor 1/2 W 20%	.17
63-1845	27K Ohm Resistor 1/2 W 10%	.17
63-1855	47K Ohm Resistor 1/2 W 10% (2 required)	.17
63-1859	56K Ohm Resistor 1/2 W 10%	.17
63-1866	82K Ohm Resistor 1/2 W 10%	.17
63-1869	100K Ohm Resistor 1/2 W 10% (2 required)	.17
63-1870	100K Ohm Resistor 1/2 W 20% (3 required)	.17
63-1883	220K Ohm Resistor 1/2 W 10% (5 required)	.17
63-1898	470K Ohm Resistor 1/2 W 20% (2 required)	.17
63-1911	1 Megohm Resistor 1/2 W 10%	.17
63-1912	1 Megohm Resistor 1/2 W 20% (4 required)	.17
63-1925	2.2 Megohm Resistor 1/2 W 10%	.17
63-1926	2.2 Megohm Resistor 1/2 W 20%	.17
63-1940	4.7 Megohm Resistor 1/2 W 20% (2 required)	.17
63-1954	10 Megohm Resistor 1/2 W 20% (3 required)	.17
63-4880	Potentiometer	1.40
63-4910	Dual Loudness Control	3.00
63-4923	Dual Tone Control & Switch	3.50
63-5306	33 Ohm Fusing Resistor	
63-5624	82 Ohm Resistor 2 W 10%	
63-5673	1200 Ohm Resistor 2 W 10% (2 required)	.34
63-6122	18K Ohm Resistor 1 W 10%	.25
64-862	Brass Eyelet (4 used on S-65077)	
78-1292	Pilot Light Socket & Wire	.75
78-1313	Wafer Socket (12BA6)	.30
78-1318	Wafer Socket (50C5) (2 required)	
78-1319	Noval Wafer Socket (19EA8)	.35
78-1330	Noval Wafer Socket (19GQ7)	
78-1375	Wafer Socket (12BE6)	
78-1605	Wafer Socket (12BA6) (2 required)	
78-1606	Wafer Socket (12AU6)	
78-1607	Noval Wafer Socket (12AX7A)	
80-1188	Tension Spring (Gang)	.10

PART NO.	DESCRIPTION	PRICE
83-1635	Insulating Strip (Volume Control)	.03
83-2145	Five Lug Terminal Strip	.10
83-2639	Three Lug Terminal Strip (2 required)	.05
83-3670	Six Lug Terminal Strip (3 required)	.15
83-3671	Five Lug Terminal Strip (2 required)	.15
83-3672	Eight Lug Terminal Strip (3 required)	.20
83-3674	Seven Lug Terminal Strip (2 required)	.20
83-4125	Two Lug Terminal Strip	.10
85-815	Bandswitch	
93-127	#10 Internal Shakeproof Lockwasher (2 required)	.03
93-993	Insulating Washer (Volume Control)	.03
95-1915	1st I.F. Transformer (AM)	2.50
95-1917	3rd I.F. Transformer (AM)	2.50
95-1919	2nd & 3rd I.F. Transformer - FM (2 required)	2.50
95-1920	Ratio Detector Transformer	2.50
95-1924	2nd I.F. Transformer (AM)	2.50
95-2073	Input Mixer Transformer	2.50
95-2076	Doubler Mixer Transformer	4.50
95-2077	Detector Coil	3.00
95-2078	Trap Coil	2.50
95-2177	Dial Light Transformer	
95-2180	Audio Output Transformer (2 required)	
97-607	Chassis Mounting Stud (4 required)	.10
100-249	Pilot Light Bulb - #1847 (2 required)	.18
103-23	Silicon Diode (2 required)	.75
103-34	Silicon Diode (2 required)	1.35
105-42	R/C Network	.50
105-78	R/C Network	
105-79	R/C Network	
113-8	6-32 x 1/4 x 1/4 Hex Hd. Mach. Screw - Internal Shakeproof Lockwasher (3 used on 22-5014)	.03
113-149	6-18 x 3/8 x 1/4 Hex Hd. Self-Tap Screw - Statuary Bronze (External Lockwasher) (joins S-65071 and 22-5014)	
114-26	8-18 x 1/4 x 1/4 Hex Hd. Self-Tap Screw - Statuary Bronze (3 used on 22-5014, and 2 used on each 95-2180)	.03
114-862	8-18 x 1/2 Hex Washer Hd. Self-Tap Screw - Statuary Bronze (4 used on S-65077)	.03
125-117	Rubber Grommet (4 used on S-65077)	.03
126-797	Tube Shield (19GQ7)	.10
126-1009	Pilot Light Shield (2 required)	.25
149-211	Iron Core (1 part of each S-54155 and S-54156)	.10
171-25	Pilot Light Lens-Orange (Part of S-65071)	.10
171-26	Pilot Light Lens-Blue (Part of S-65071)	.10
188-102	Clamping Ring (Part of S-65071)	.03
199-183	Shielded Paper Sleeve	.03

PART NO.	DESCRIPTION	PRICE
199-299	Shielded Paper Sleeve	.05
212-27	Silicon Rectifier	2.00
S-54155	Oscillator Coil Assembly (BC)	1.25
S-54156	Detector Coil Assembly (BC)	1.25
S-55958	Variable Capacitor Mounting Bracket Assembly	.60
S-56275	Drive Cord Assembly (Gang)	.15
S-56276	Drive Cord Assembly (Gang)	.15
S-65058	Speaker Socket & Mounting Strip Assembly	
S-65071	Indicator Hub & Lens Assembly	
S-65077	F.M. Tuner Assembly (see F.M. Tuner parts list for components)	
S-65200	Phono Jack Assembly	.40

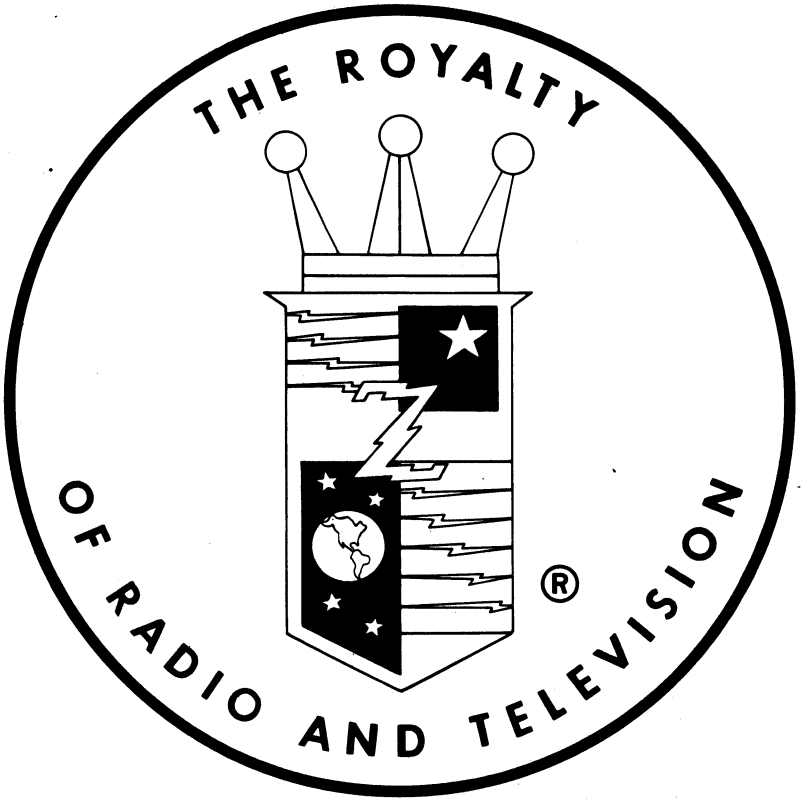

ZENITH RADIO CORPORATION

1900 N. Austin Avenue

CHICAGO, ILLINOIS 60639

HF13RR5286430M

PRINTED IN U.S.A.